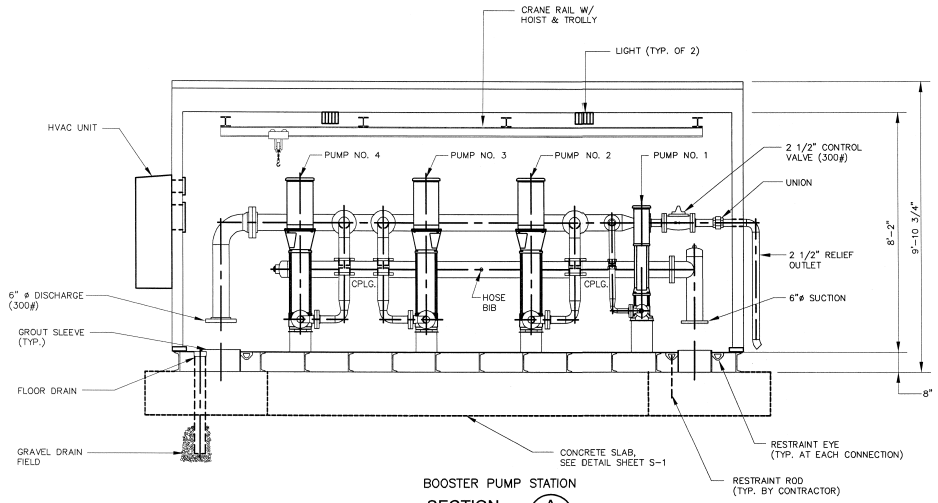

BOOSTER PUMP STATION

SECTION A / M5

1/2" = 1'-0"

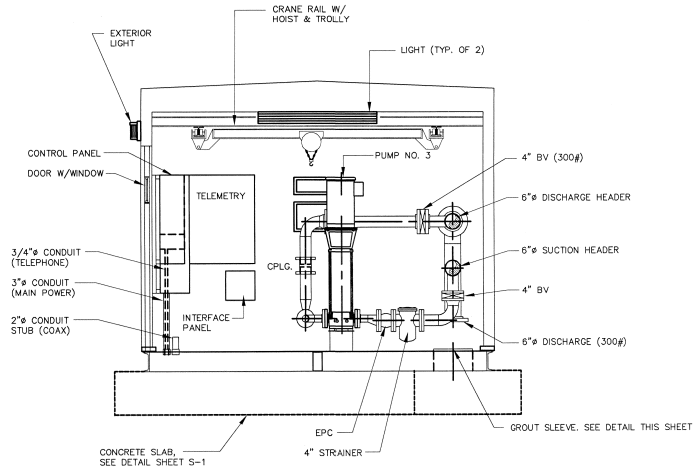

BOOSTER PUMP STATION

SECTION B / M5

1/2" = 1'-0"

NOTES:

1. EPC – ELASTOMER PIPE CONNECTOR
2. FCA – FLANGED COUPLING ADAPTOR
3. THE CONNECTION BETWEEN THE STATION PIPING AND WATER MAINS MUST BE RESTRAINED.
4. THE CONTRACTOR SHALL FILL THE VOIDS UNDER THE PUMP STATION WHERE BOTH PIPING AND CONDUITS ENTER THE STATION BUILDING.

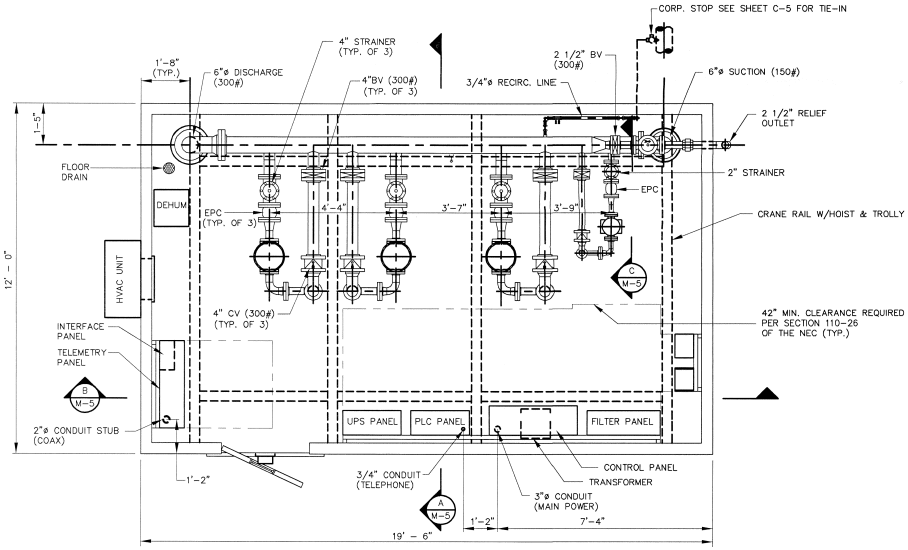

BOOSTER PUMP STATION

PLAN

1/2" = 1'-0"

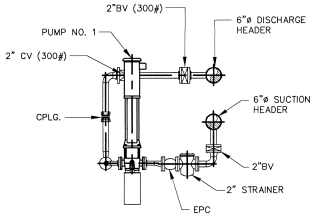

BOOSTER PUMP STATION

SECTION C / M5

1/2" = 1'-0"

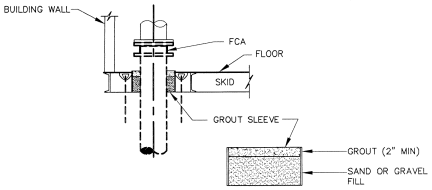

GROUT SLEEVE

DETAIL D / M-5

NTS

REV. NO.	DATE	DRWN	CHKD	REMARKS
1	10/07	JSL	WRL	REVISED PER ADDENDA NO. 1

DESIGNED BY: W LAGARENNE
DRAWN BY: M RIDGEWELL
SHEET CHK'D BY: W. LAGARENNE
CROSS CHK'D BY: S TRIPP
APPROVED BY: P PARKINS
DATE: SEPTEMBER 2007

CDM
Camp Dresser & McKee
501 South McDowell Street, Suite 512
Charlotte, NC 28204
Tel: (704) 342-4546
consulting • engineering • construction • operations

CITY OF ASHEVILLE
ASHEVILLE, NORTH CAROLINA
TOWN MOUNTAIN DISTRIBUTION, STORAGE AND PUMP STATION IMPROVEMENTS

HAW CREEK BOOSTER PUMP STATION - DETAILS

PROJECT NO. 20481-60263
FILE NAME: 60263M5.dwg
SHEET NO.
M-5