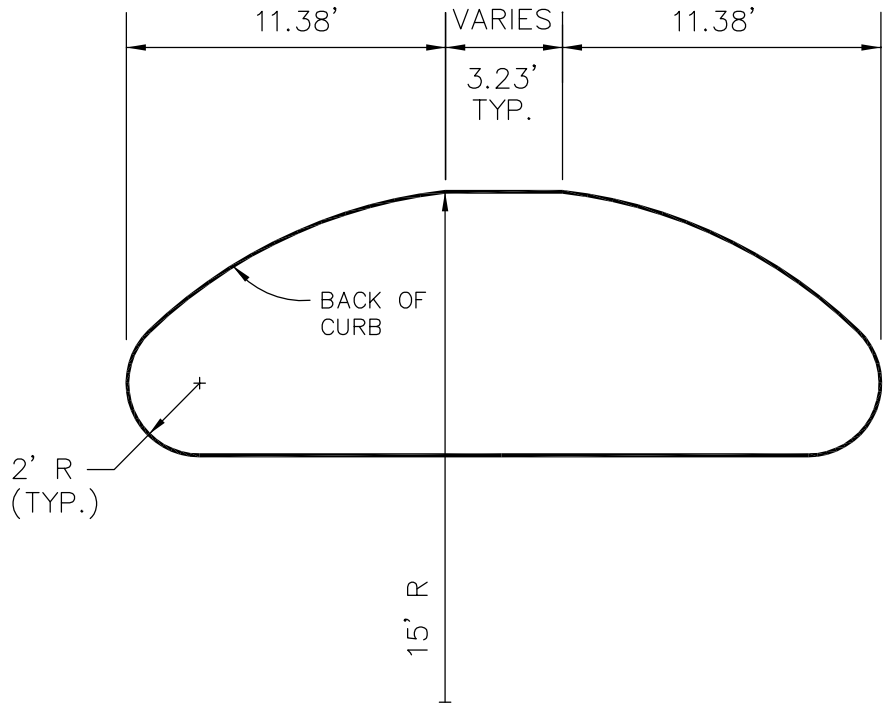

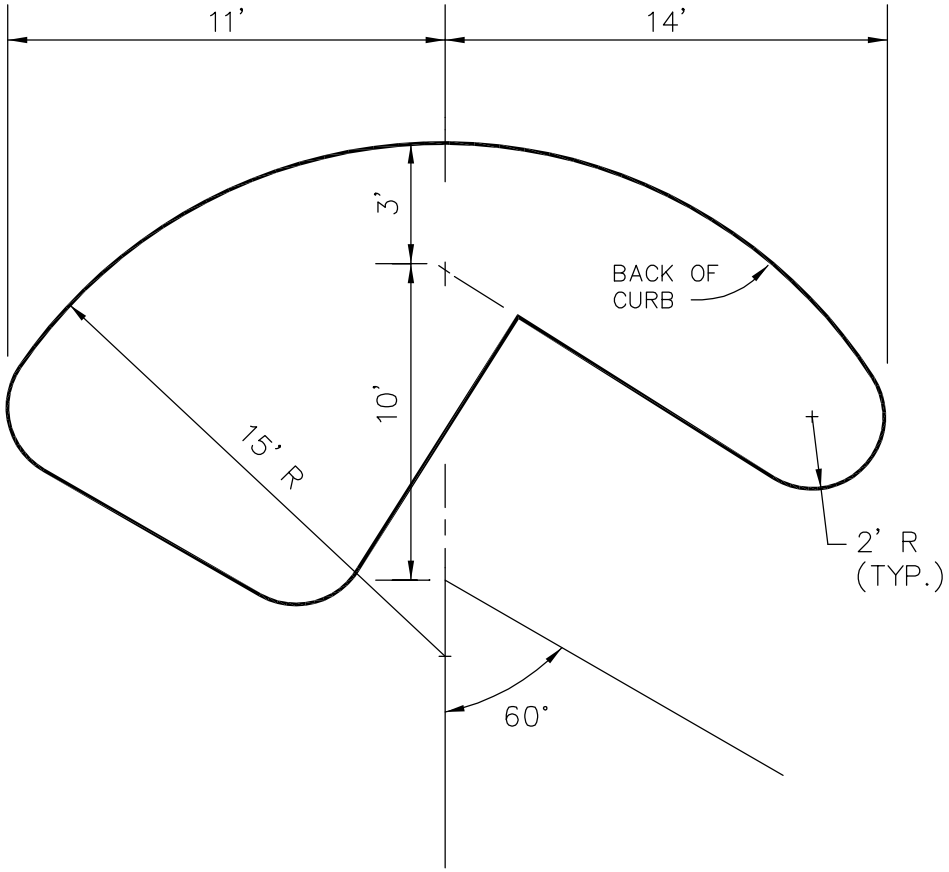

REVISIONS	
DATE	DESCRIPTION

ASHEVILLE

CITY OF ASHEVILLE, N.C.
ENGINEERING DEPARTMENT

END ISLANDS FOR PARKING LOTS

STD. No.
3.09