FOR USE WITH NCDOT STD. 840.11A AND 840.12B
FOR ISLAND DIMENSIONS SEE NCDOT STD. 852.01B

SECTION – AA

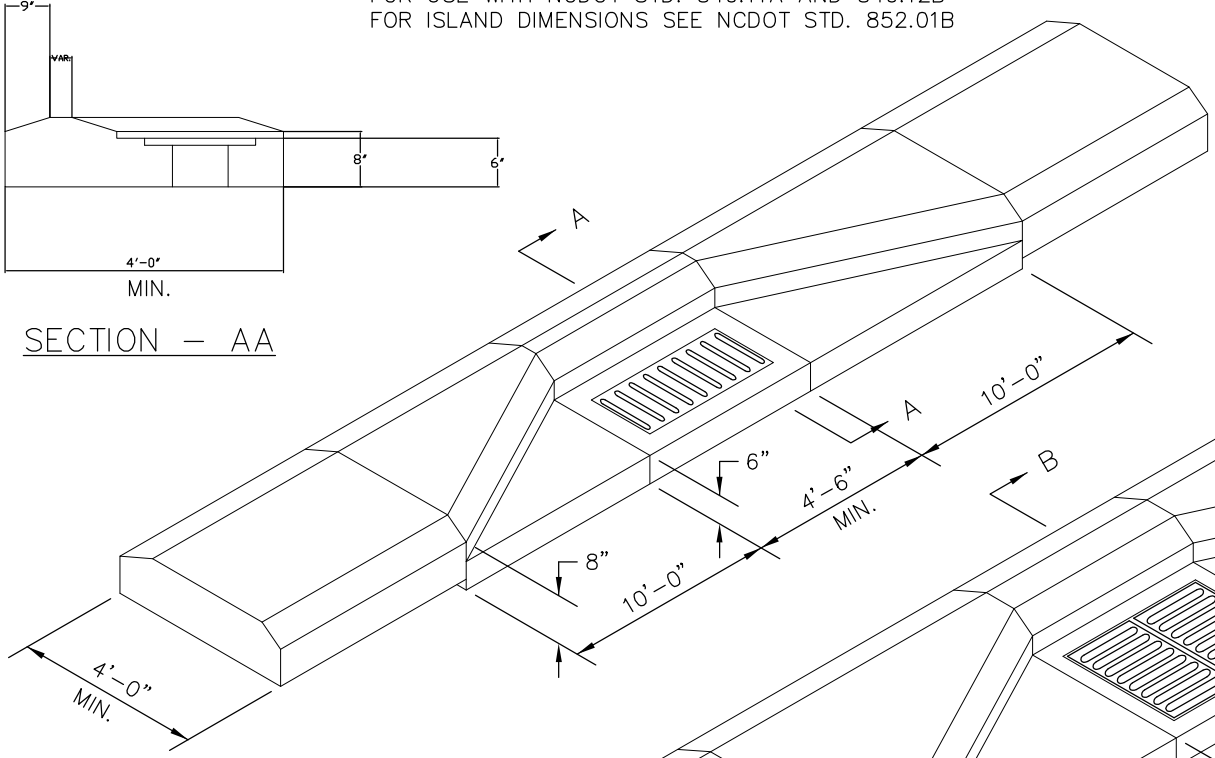

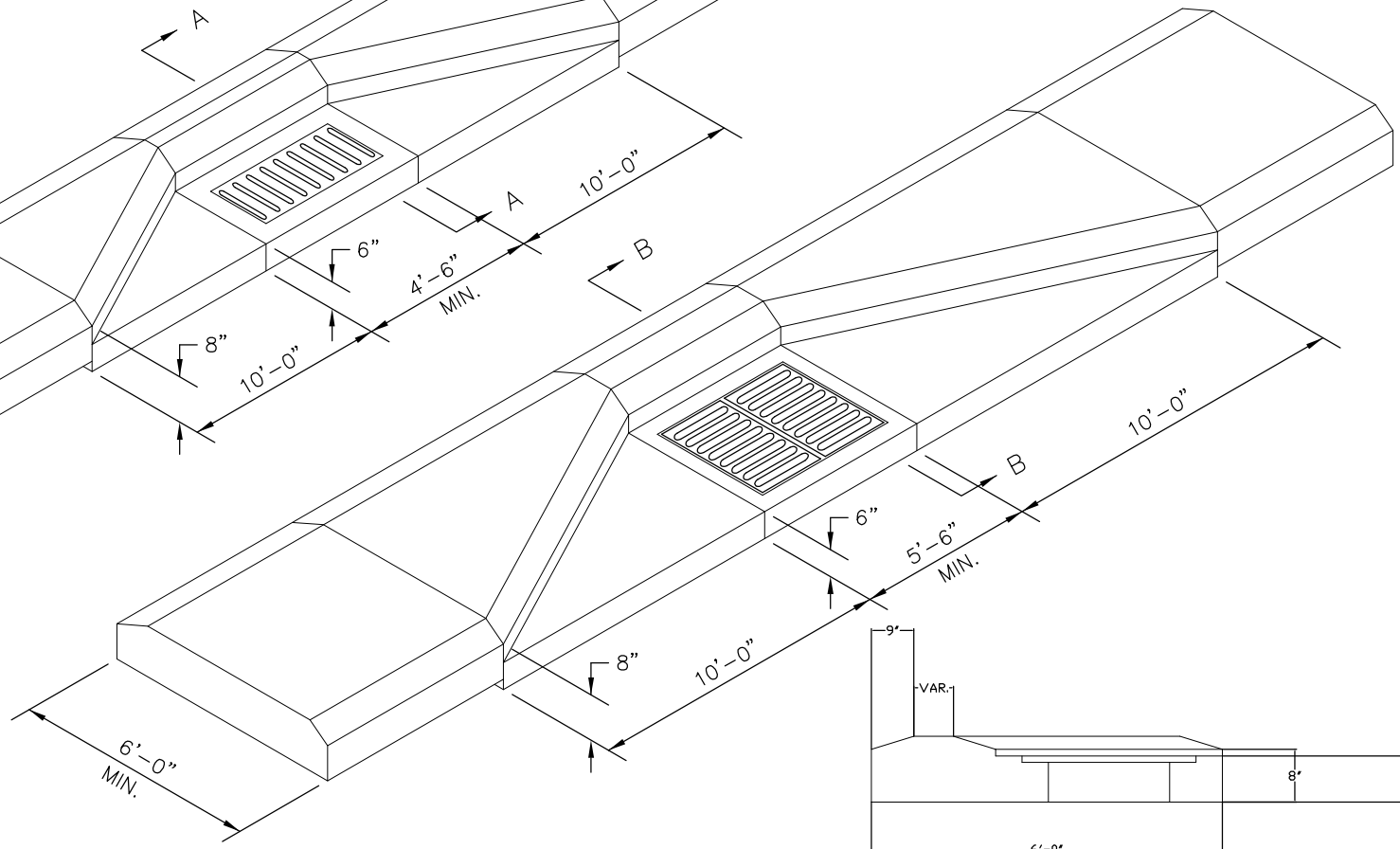

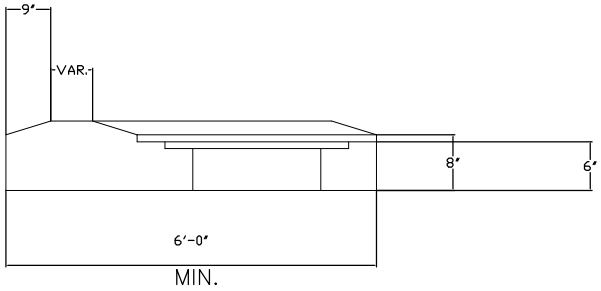

SECTION – BB

FOR USE WITH NCDOT STD. 840.14B AND 840.15C
FOR ISLAND DIMENSIONS SEE NCDOT STD. 852.01B

REVISIONS	
DATE	DESCRIPTION

ASHEVILLE

CITY OF ASHEVILLE, N.C.
ENGINEERING DEPARTMENT

STANDARD MEDIAN CURB INLET

STD. No.
8.04A