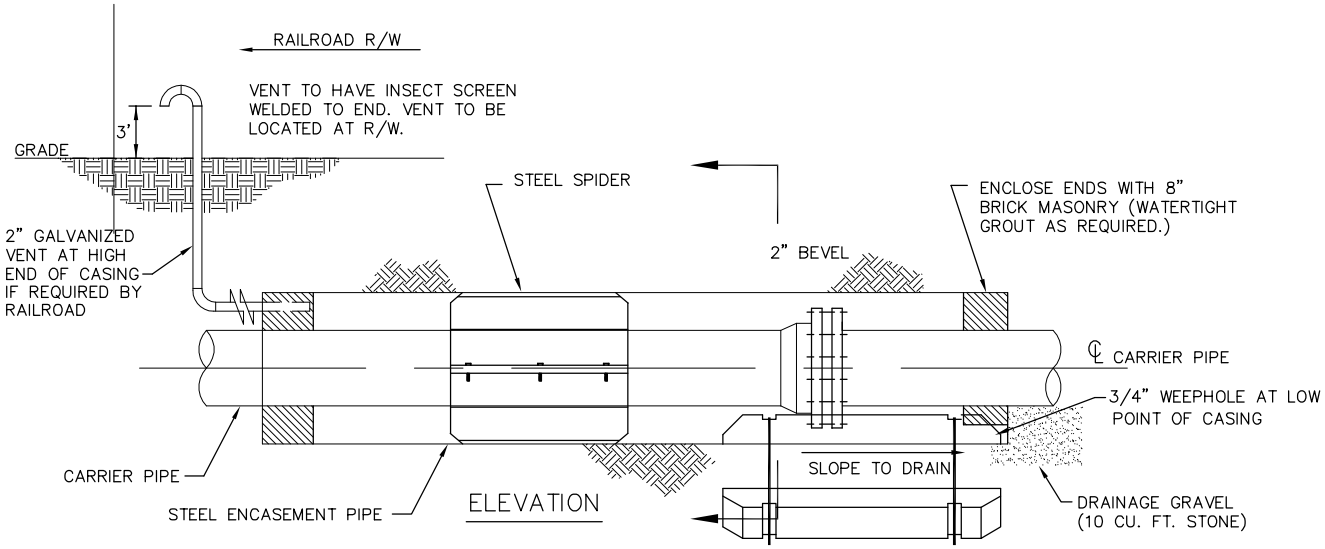

NOTE:
CARRIER PIPE JOINTS SHALL BE RESTRAINED AS SPECIFIED IN SECTION 6.02

NOTE:
1. STEEL "SPIDERS" MUST BE USED FOR SUPPORT OF THE CARRIER PIPE WITHIN THE CASING PIPE. A MINIMUM OF 2 PER JOINT OF CARRIER PIPE IS REQUIRED.
2. FOR WATER LINES USE DETAIL 6.08.

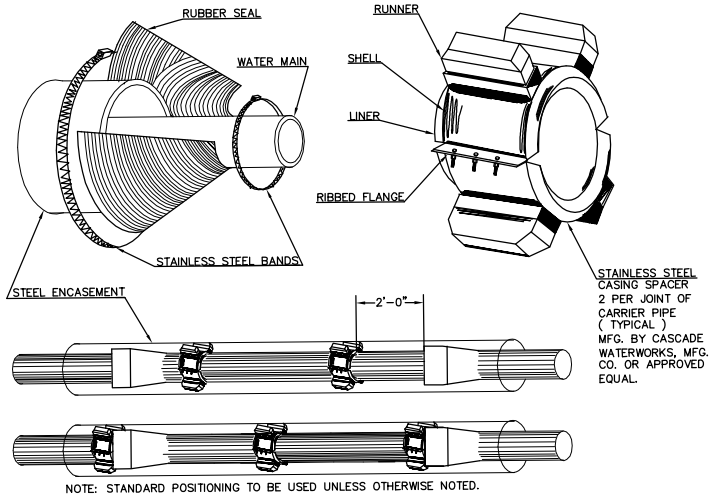

NOTE: STANDARD POSITIONING TO BE USED UNLESS OTHERWISE NOTED.

POSITIONING

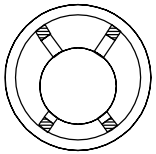

RESTRAINED: KEEPS CARRIER FROM FLOATING OR BUCKING UNDER SUDDEN PRESSURE SURGES

SECTION

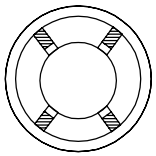

CENTERED: POSITIONS IN CENTER OF CASING. STABLE WITH MOST ANNULAR SPACE AVAILABLE FOR OTHER USES.

SECTION

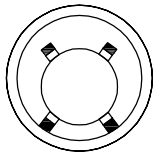

STANDARD: CARRIER LAYS ON CASING BOTTOM. TOP RUNNERS MAINTAIN SPACING IN THE EVENT OF ROLLOVER

SECTION

REVISIONS	
DATE	DESCRIPTION

ASHEVILLE

CITY OF ASHEVILLE, N.C.
ENGINEERING DEPARTMENT

TYPICAL STEEL ENCASEMENT AND CARRIER PIPE INSTALLATION UNDER RAILROAD

STD. No.

5.08