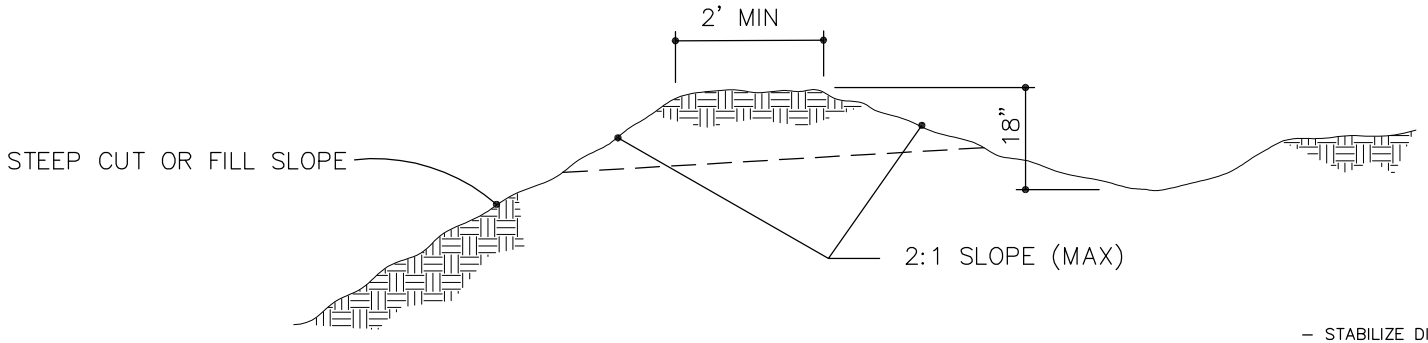


CROSS SECTION

– STABILIZE DIVERSION DITCH WITH TEMPORARY SEEDING AND EROSION CONTROL NETTING

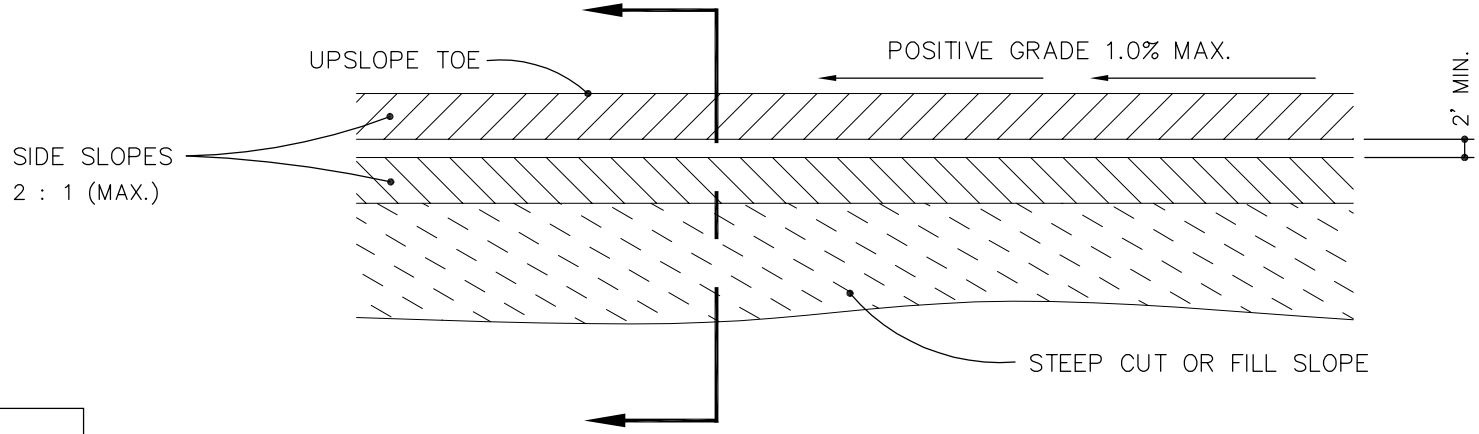


PLAN VIEW

| REVISIONS | |
|---|---|
| DATE | DESCRIPTION |
| | |
| | |
| | |

ASHEVILLE

CITY OF ASHEVILLE, N.C.
ENGINEERING DEPARTMENT

# DIVERSION DITCH

STD. No.

4.09