DESCRIPTION	DETAIL #
5/8"-3/4" WATER METER BOX	W.01
1" WATER METER BOX	W.02
1 1/2" - 2" METER & METER VAULT	W.03
STANDARD 3" & LARGE COMPOUND METER	W.04
STANDARD MULTIPLE BRANCH SEVICES	W.05
WATER SERVICE INSTALLATION W/SIDEWALK	W.06
COMBO METER / VAULT	W.07
ABOVE GROUND BACKFLOW	W.08
BELOW GROUND BACKFLOW	W.09
INSIDE BUILDING BACKFLOW	W.10
METERED FIRE LINE SCHEMATIC	W.11
DEDICATED FIRE LINE SCHEMATIC	W.12
SUMP PUMP FOR VAULTS / MANHOLES	W.13
PIPE SUPPORT DETAIL	W.14
STANDARD HYDRANT LOCATION	W.15
FIRE HYDRANT INSTALLATION	W.16
VALVE CONFIGURATION	W.17
VALVE & BOX INSTALLATION	W.18
BUTTERFLY VALVE INSTALLATION	W.19
TAPPING SLEEVE AND VALVE	W.20
TRENCH DETAIL	W.21
THRUST BLOCKS	W.22
END OF LINE PLUG	W.23
AIR RELEASE VALVE INSTALLATION	W.24
AIR RELEASE VALVE INSTALLATION 4IN	W.25
CARRIER PIPE IN STEEL ENCASEMENT PIPE	W.26
CREEK CROSSING	W.27
JUMPER TESTING ASSEMBILY	W.28
PUMP PIPE SCHEMATIC	W.29
TANK PIPE SCHEMATIC	W.30
MAIN LINE PRESSURE REDUCING VALVE	W.31
MAIN LINE PRESSURE SUSTAINGING VALVE	W.32

CAST IRON RING & COVER

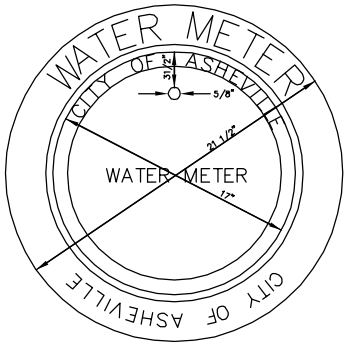

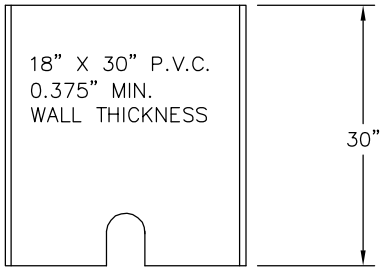

SECTION BB

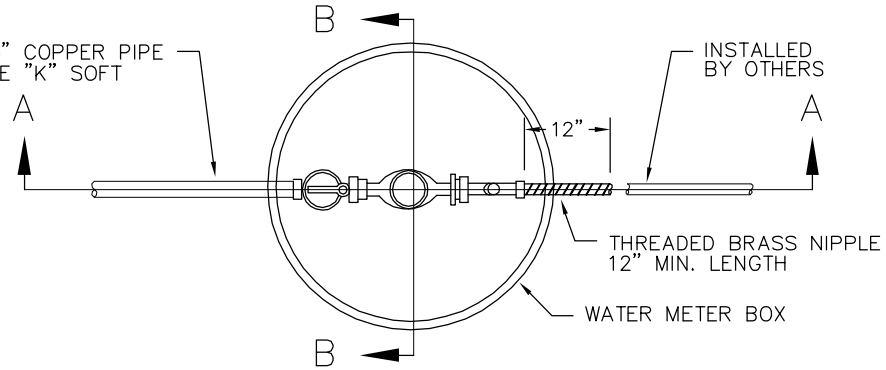

PLAN

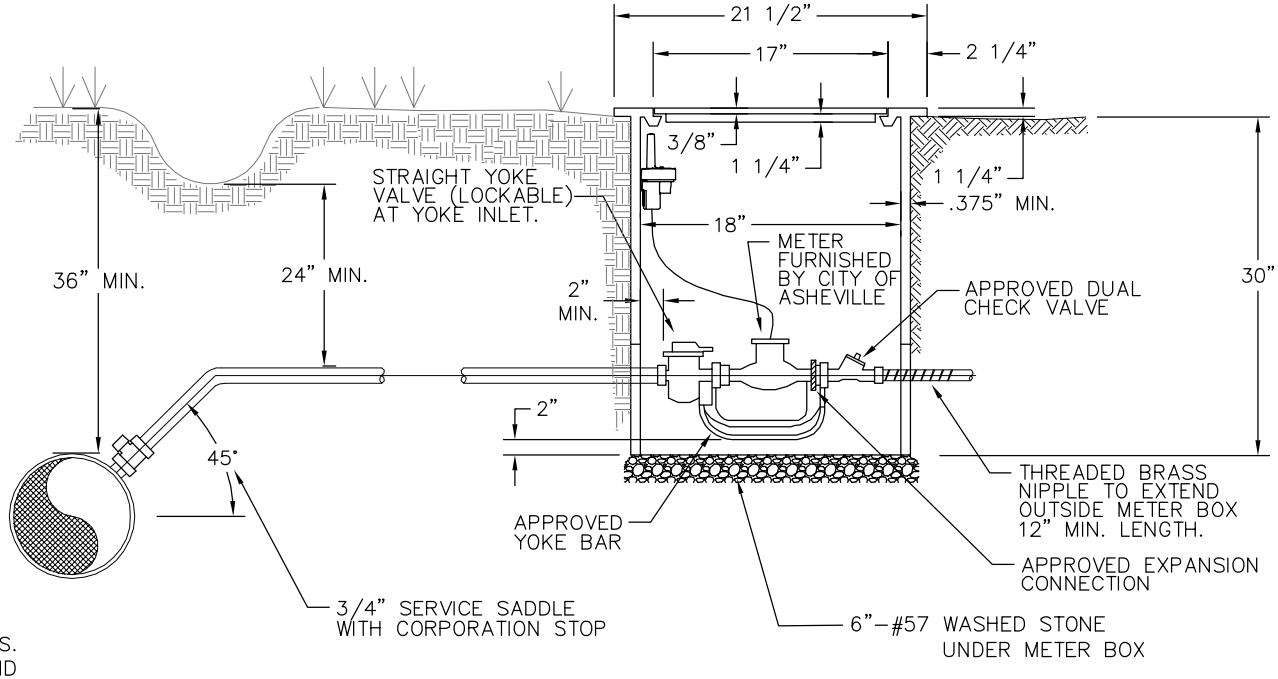

SECTION AA

GENERAL NOTES:

1. THIS DETAIL WILL APPLY TO ALL DOMESTIC WATER SERVICE TRANSFERS AS DESCRIBED IN THE TECHNICAL SPECIFICATIONS AND SHOWN ON THE ENGINEERING DRAWINGS.
2. ALL METER SERVICE FITTINGS AND APPURTERENCES IN CONTACT WITH WATER SHALL BE LEAD FREE TYPE PRODUCTS.
3. CAST IRON RING & COVER MIN WEIGHT 54 LBS. "CITY OF ASHEVILLE" LOGO ON BOTH RING AND COVER TOP OF LID–ANTI–SKID GRID SURFACE.

City of Asheville, NC

WATER ENGINEERING DIVISION

5/8"- 3/4" WATER METER BOX

REVISIONS	
DATE	DESCRIPTION
6/2009	REVISED DETAIL FROM 6.01

STD. NO.

W.01

GENERAL NOTES
1. DUAL CHECK ON OUTLET
2. REMOTE READING ASSEMBLY TO BE COMPATABLE WITH CITY OF ASHEVILLE READING DEVICES.
3. ALL METER SERVICE FITTINGS AND APPURTENANCES IN CONTACT WITH WATER SHALL BE LEAD FREE TYPE PRODUCTS.

MATERIAL: COPPER-STEEL
METHOD OF CONSTRUCTION: 3/16" STEEL PLATE WELDED & POWDERCOATED
LID: 3/16" STAINLESS FLOOR PLATE STEEL-REINFORCED WITH 20"X10" READER DOOR AND PADLOCK RECESSED DOOR.

WEIGHT: 200lbs SIZE: 38"L X 22"W X 26" D

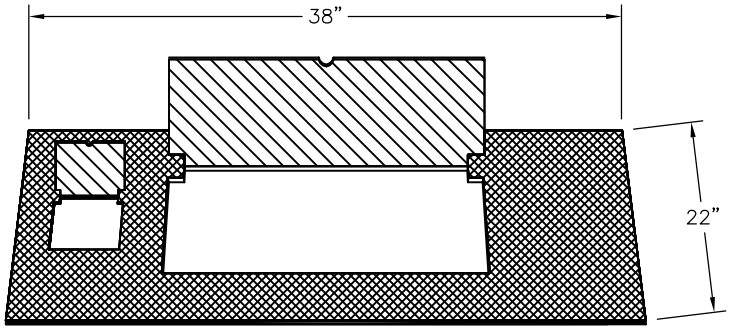

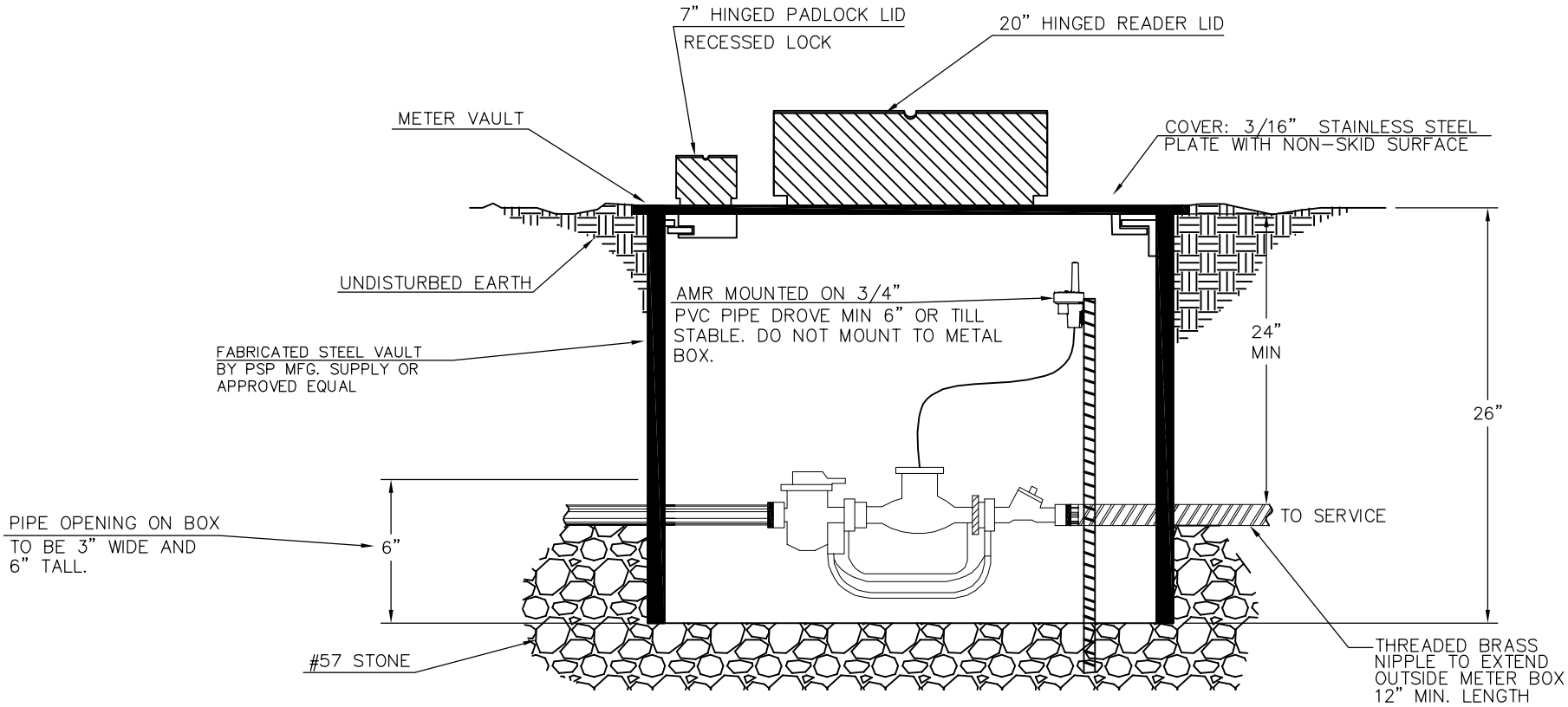

City of Asheville, NC
WATER ENGINEERING DIVISION

1" WATER METER BOX

REVISIONS	
DATE	DESCRIPTION
11/11	REVISED BOX DETAILS

STD. NO.
W.02

GENERAL NOTES:

1. BALL VALVE ON INLET.
2. DUAL CHECK ON OUTLET
3. BY-PASS INCLUDES A BALL VALVE WITH PADLOCK WINGS.
4. BRACE PIPE EYELETS.
5. DIFFERENT FLANGE SPACING MAY BE SPECIFIED.
   17¼" FOR 2" METER SETTERS
   13¼" FOR 1½" METER SETTERS
6. BE SURE THAT COPPER SETTER IS INSTALLED IN THE CORRECT POSITION IN RELATION TO WATER FLOW.
7. SEPARATION VARIES BETWEEN 1½" AND 2" METER SETTERS.

NOTES: ANGLE BALL VALVES SHOULD NOT BE USED ON THE OUTLET SIDE AS A CUSTOMER SHUT OFF. FLANGED ANGLE INVERTED KEY VALVE SHOULD BE USED FOR THIS PURPOSE. METER TO BE FURNISHED AND INSTALLED BY THE CITY OF ASHEVILLE. METER MUST BE SET BEFORE CONNECTION TO BRASS NIPPLE.

ALL METER SERVICE FITTINGS AND APPURTERENCES IN CONTACT WITH WATER SHALL BE LEAD FREE TYPE PRODUCTS.

MATERIAL: COPPER-STEEL
METHOD OF CONSTRUCTION: 3/16" STEEL PLATE WELDED & POWDERCOATED
LID: 3/16" STAINLESS FLOOR PLATE STEEL-REINFORCED WITH 20"X10" READER DOOR AND PADLOCK RECESSED DOOR.

WEIGHT: 200lbs SIZE: 38"L X 22"W X 26" D

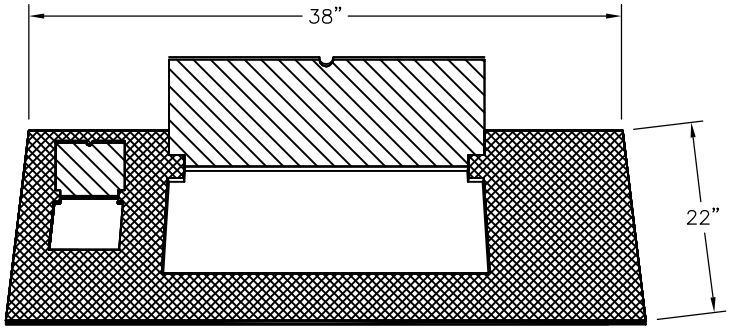

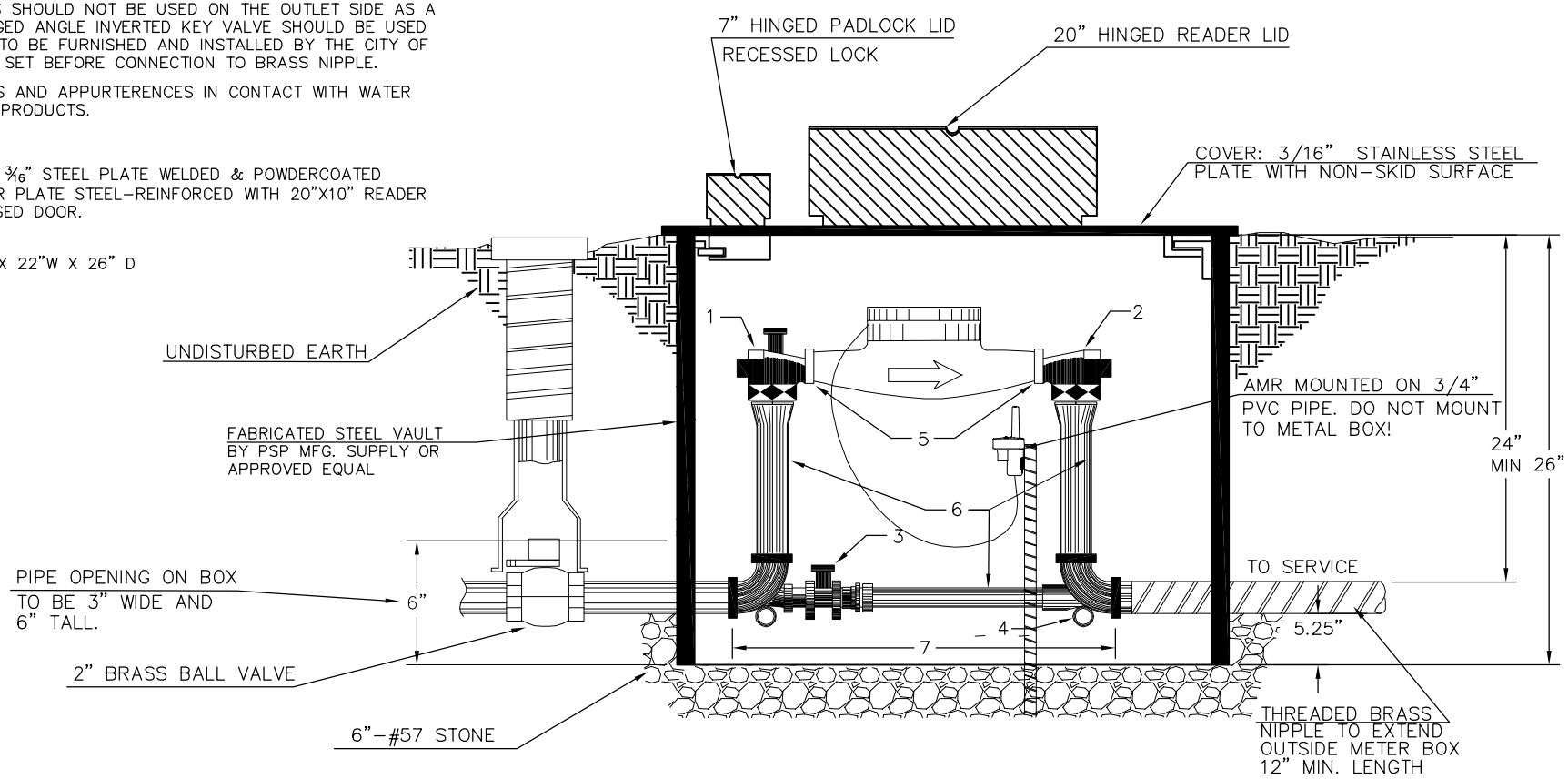

City of Asheville, NC WATER ENGINEERING DIVISION	POSITIVE DISPLACEMENT 1½" - 2" METER & METER VAULT	REVISIONS		STD. NO.
		DATE	DESCRIPTION	W.03
		6/2009	REVISED DETAIL FROM 6.02	
		11/11	REVISED BOX DETAILS	

GENERAL NOTES:

1. METER ASSEMBLY TO BE ELECTROMAGNETIC FLOW METER WITH DUCTILE IRON FLANGED PIPE
2. METER DEVICE SHALL BE PURCHASED THRU THE CITY OF ASHEVILLE.
3. CONCRETE VAULTS SHALL BE PRECAST WITH A MIN. 3000 PSI CONCRETE.
4. ACCESS DOOR SHALL BE A 48" X 48" STEEL/ALUMINUM DOUBLE LEAF DOOR REINFORCED FOR AASHTO H-20 LOADING IN AREAS SUBJECT TO VEHICULAR TRAFFIC.
5. DRAIN TO DAYLIGHT OR DRAINAGE STRUCTURE WITH FLAPPER VALVE AT 1% MINIMUM SLOPE. PROVIDE 6" MINIMUM ABOVE BOTTOM OF STRUCTURE TO DISCHARGE INVERT.
6. TO ENSURE POSITIVE DRAINAGE, THE VAULT SHOULD BE TIED INTO THE EXISTING STORM DRAINAGE SYSTEM WHEN POSSIBLE OR DRAINED TO DAYLIGHT.
7. ALL FITTINGS AND APPURTENANCES OUTSIDE THE VAULT SHALL BE PROPERLY RESTRAINED.
8. ALL PIPING INSIDE THE VAULT SHALL BE 6" FLANGED DUCTILE IRON PIPE.
9. M-5000 AMPLIFIER THAT IS SUPPLIED IN A (NEMA 4) BOX TO BE INSTALLED WITHIN A (NEMA 6P) ENCLOSURE PER MANUFACTURES SPECIFICATION FOR MOISTURE PROTECTION.

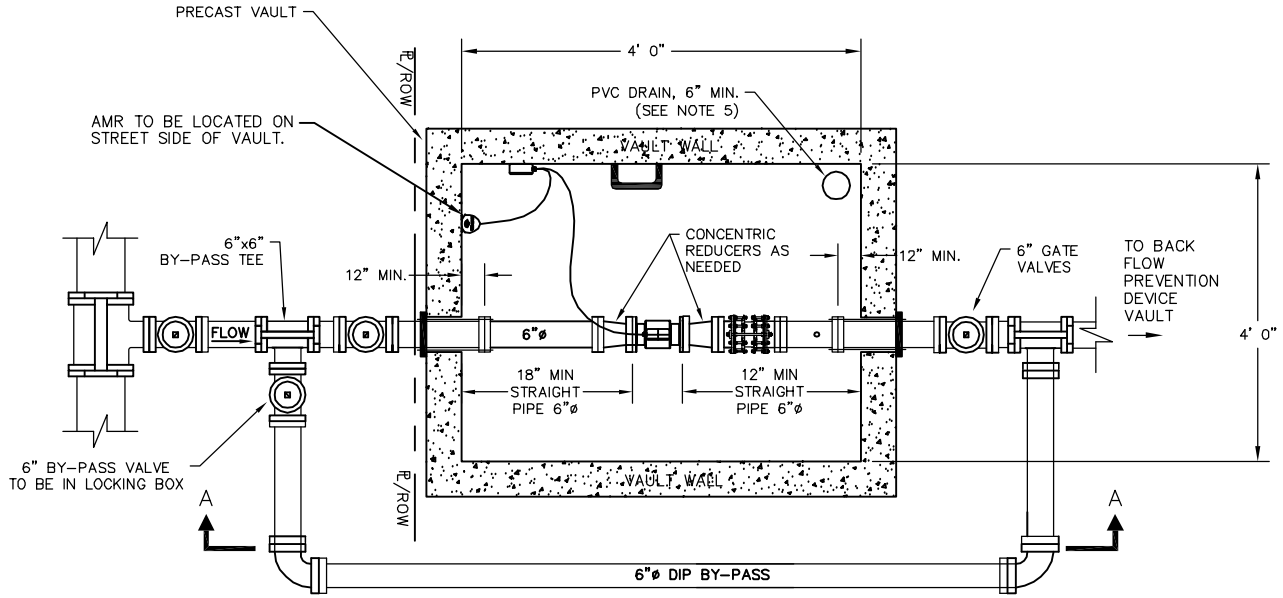

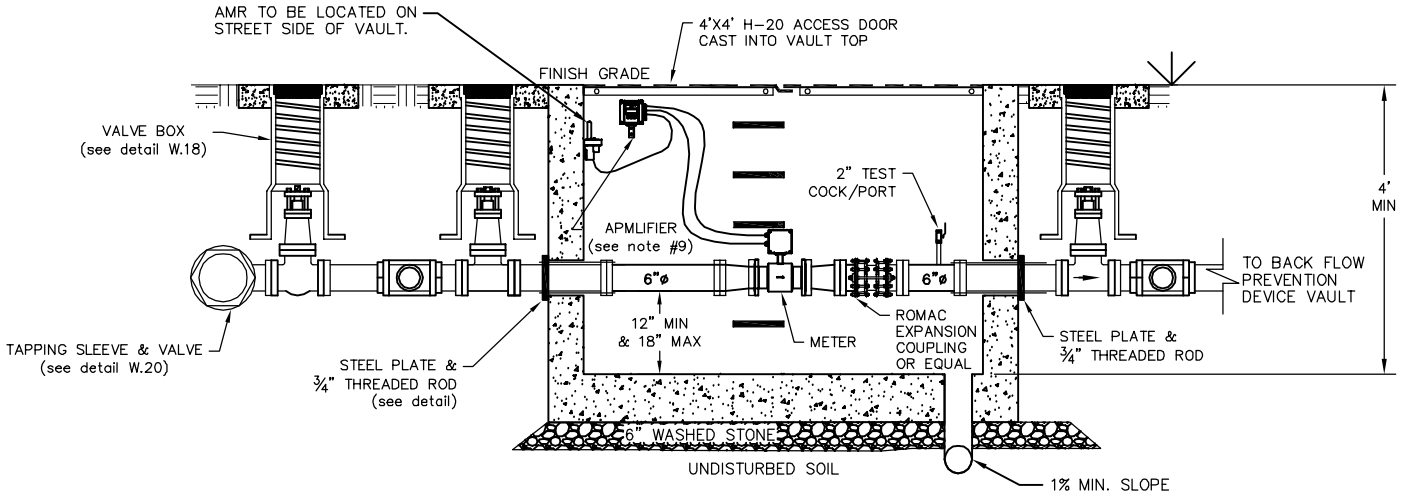

SECTION A-A

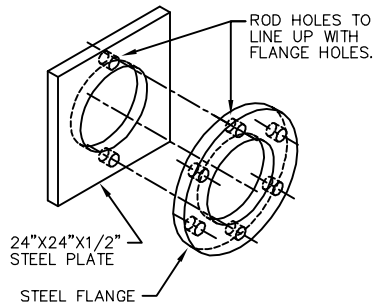

STEEL PLATE & FLANGE

NOT TO SCALE

City of Asheville, NC

WATER ENGINEERING DIVISION

STANDARD 3", 4" & 6" ELECTROMAGNETIC FLOW METER INSTALLATION AND VAULT

REVISIONS		STD. NO.
DATE	DESCRIPTION	
6/2009	REVISED DETAIL FROM 6.03	W.04
12/2014	REVISED DETAIL	
2/2015	REVISED DETAIL	

ALL OTHER UTILITIES SHALL BE LOCATED A MINIMUM OF 3' AWAY FROM WATERLINE

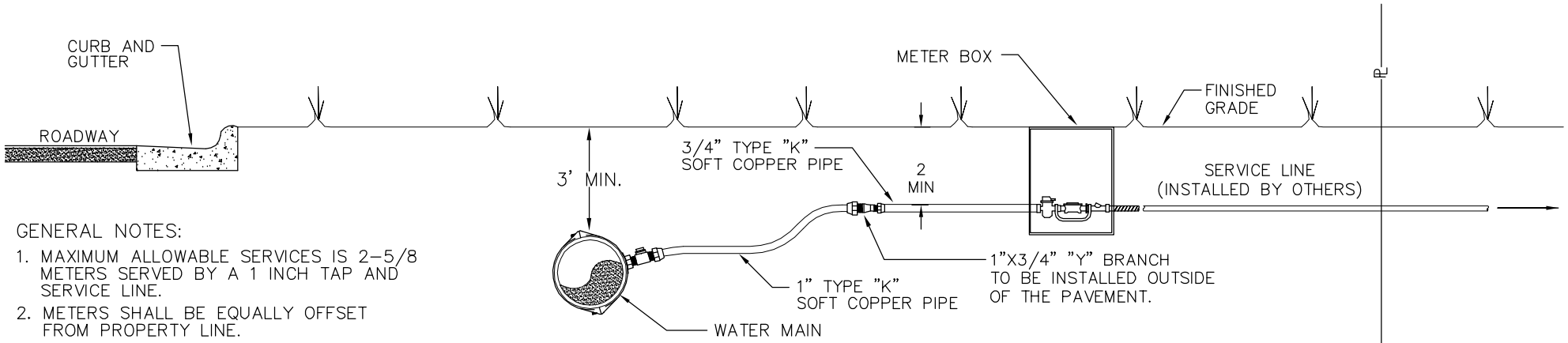

ELEVATION VIEW

GENERAL NOTES:

1. MAXIMUM ALLOWABLE SERVICES IS 2-5/8 METERS SERVED BY A 1 INCH TAP AND SERVICE LINE.
2. METERS SHALL BE EQUALLY OFFSET FROM PROPERTY LINE.
3. METERS SHALL BE LOCATED OUTSIDE DITCHES AND IN RELATIVELY FLAT AREAS
4. MINIMUM LENGTH OF BRASS NIPPLE SHALL BE 12 INCHES (12").
5. ALL FITTINGS IN DIRECT CONTACT WITH WATER SHALL BE LEAD FREE BRASS.

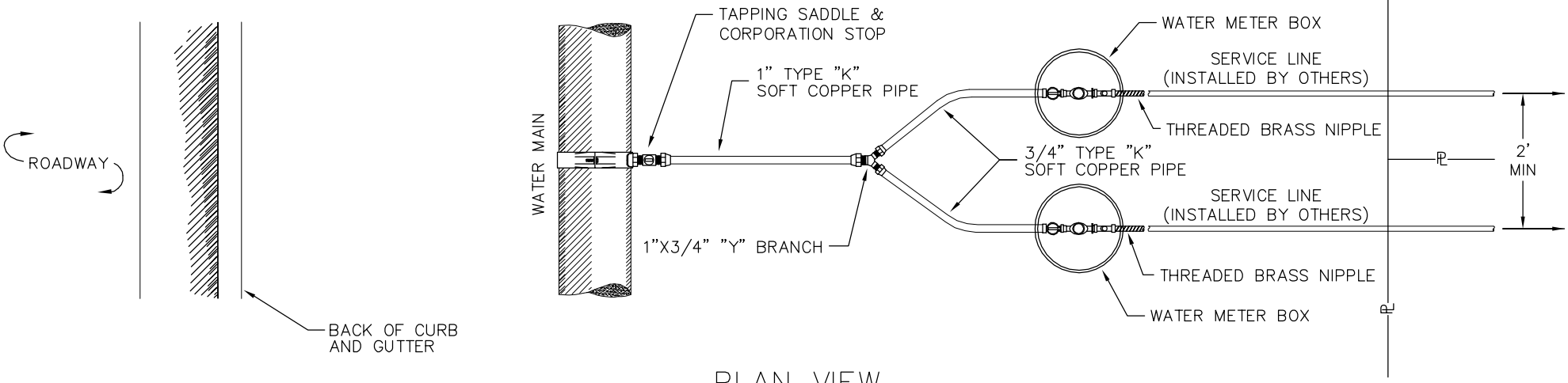

PLAN VIEW

City of Asheville, NC WATER ENGINEERING DIVISION	STANDARD MULTIPLE BRANCH SERVICES	REVISIONS		STD. NO.
		DATE	DESCRIPTION	W.05
		6/2009	REVISED DETAIL FROM 6.15	

GENERAL NOTES:

1. PVC SLEEVE SHALL EXTEND A MINIMUM OF 6" EITHER SIDE OF SIDEWALK.
2. PVC SLEEVE DIAMETER SHALL BE AT LEAST 1/2" LARGER THAN THE OUTSIDE DIAMETER OF THE COPPER SERVICE LINE.
3. SLEEVE REQUIREMENT APPICABLE TO ALL SERVICE LINES INSTALLED UNDERNEATH SIDEWALKS, REGARDLESS OF SIZE.
4. MINIMUM LENGTH OF BRASS NIPPLE SHALL BE 12 INCHES (12").
5. METERS SHALL BE LOCATED OUTSIDE DITCHES AND IN RELATIVELY FLAT AREAS.

ALL OTHER UTILITIES SHALL BE LOCATED A MINIMUM OF 3' AWAY FROM WATERLINE

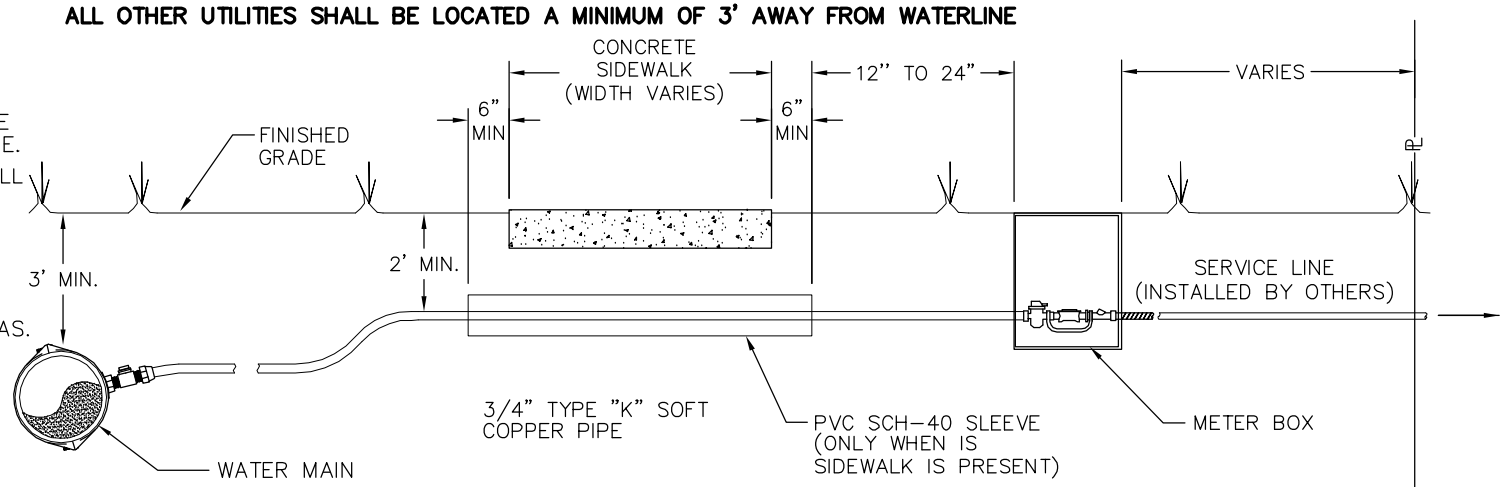

ELEVATION VIEW

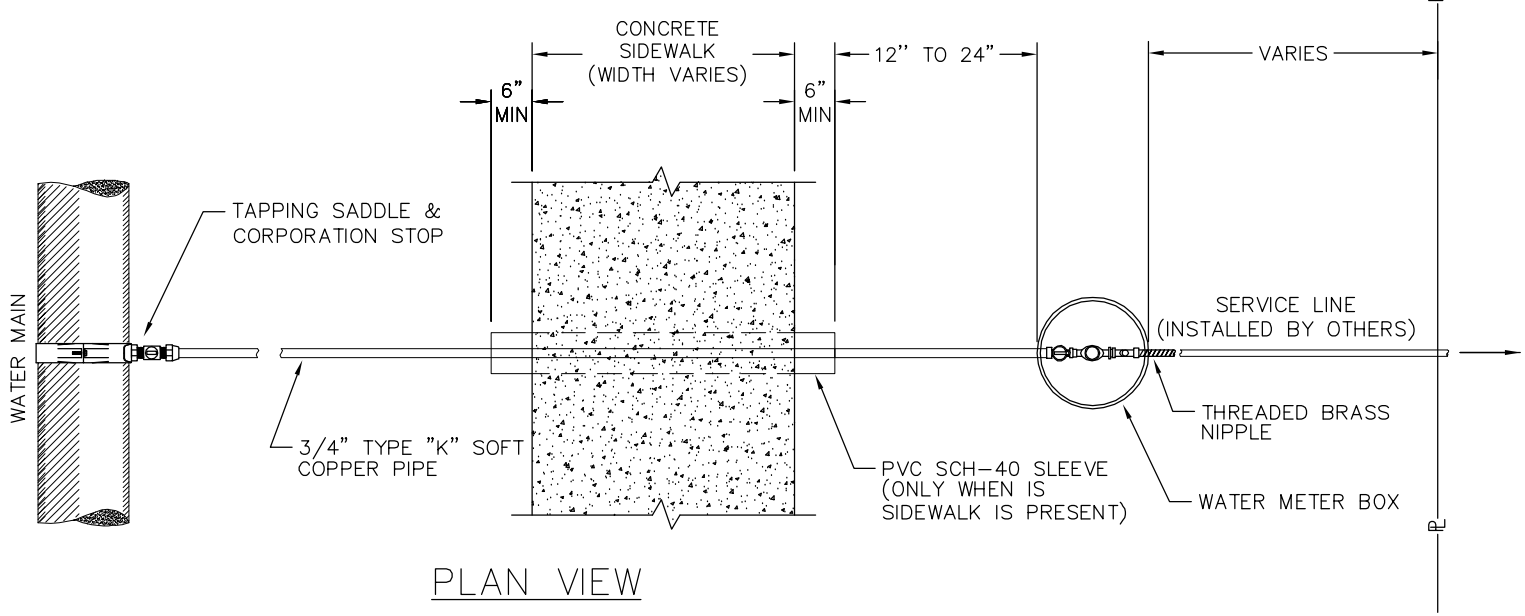

PLAN VIEW

City of Asheville, NC
WATER ENGINEERING DIVISION

TYPICAL WATER SERVICE INSTALLATION WITH SIDEWALK

REVISIONS	
DATE	DESCRIPTION

STD. NO.
W.06

LINE SIZE	INSIDE PIT DIMENSIONS			ACCESS DOOR SIZE
	LENGTH	WIDTH	DEPTH	
6" or >	8'-0"	6'-0"	6'-6"	DOUBLE LEAF 4'-0" x 4'-0"
8"	9'-0"	6'-0"	7'-0"	DOUBLE LEAF 5'-0" x 5'-0"
10"	10'-0"	6'-0"	7'-0"	DOUBLE LEAF 4'-0" x 6'-0"
GREATER THEN 10"	VARIES	VARIES	VARIES	DOUBLE LEAF 4'-0" x 6'-0"

***MINIMUM UNIT DIMENSIONS REQUIRED AND CONTRACTOR TO CONFIRM ALL CLEARANCES.**

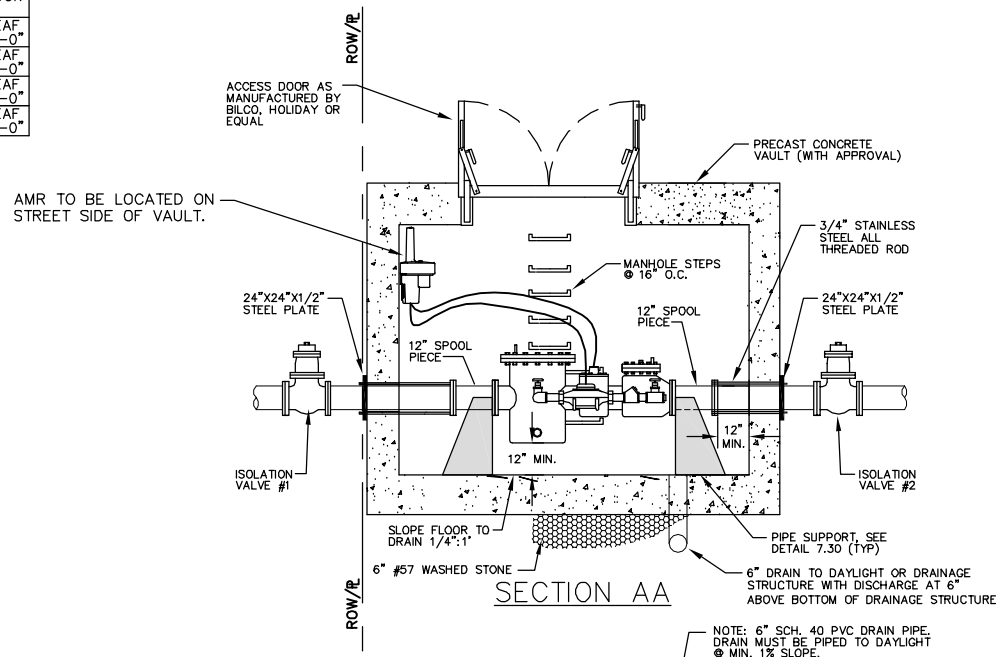

SECTION AA

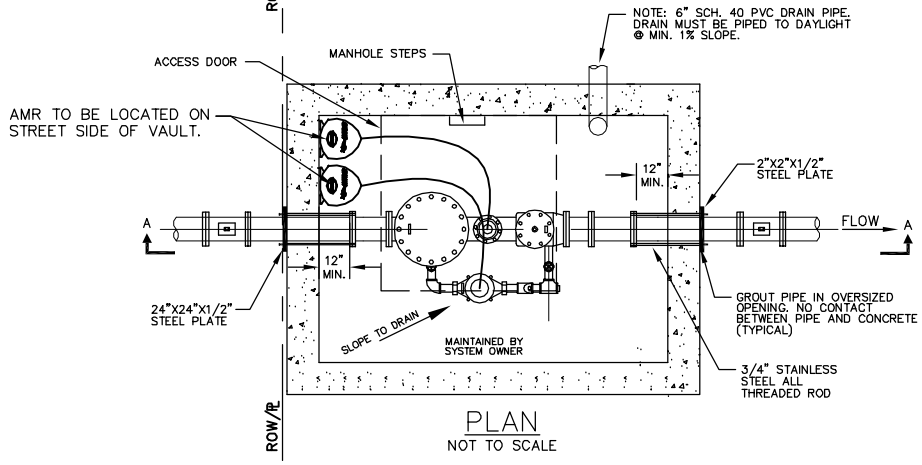

PLAN

NOT TO SCALE

GENERAL NOTES:

1. WHERE SPRINKLER SYSTEMS ARE USED, A FIRE DEPARTMENT CONNECTION SHALL BE PROVIDED ON THE STREET SIDE OF THE BUILDING, FULLY VISIBLE AND RECOGNIZABLE FROM THE STREET OR NEAREST POINT OF FIRE DEPARTMENT VEHICLE ACCESS OR AS OTHERWISE APPROVED BY THE GOVERNING FIRE OFFICIAL.
2. THERE SHALL BE A MINIMUM 12" OF FREE CLEARANCE BETWEEN THE SIDES AND BOTTOM OF THE VAULT AND THE COMBINATION METER.
3. ISOLATION VALVE #2 REQUIRED WHEN BACKFLOW DEVICE IS NOT INSTALLED ADJACENT TO MASTER METER VAULT
4. AMR'S ASSEMBLIES REQUIRED FOR BOTH METERS.

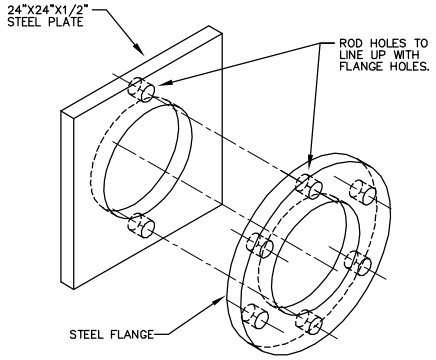

STEEL PLATE & FLANGE

NOT TO SCALE

City of Asheville, NC

WATER ENGINEERING DEPARTMENT

COMBINATION METER / VAULT ENCLOSURE

REVISIONS	
DATE	DESCRIPTION

STD. NO.

W.07

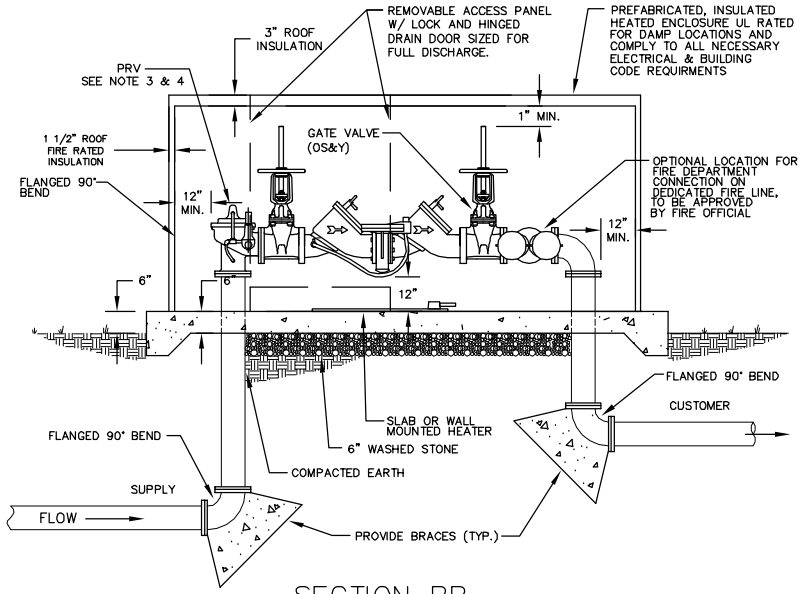

SECTION BB
NOT TO SCALE

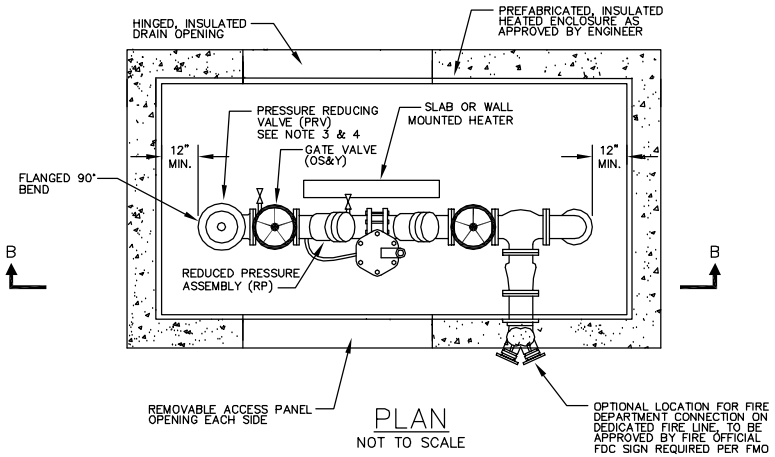

PLAN
NOT TO SCALE

GENERAL NOTES:

1. WHERE SPRINKLER SYSTEMS ARE USED, A FIRE DEPARTMENT CONNECTION SHALL BE PROVIDED ON THE BUILDING OR AS OTHERWISE APPROVED BY FIRE OFFICIAL. CONNECTION LOCATION(S) MUST BE APPROVED BY FIRE OFFICIAL.
2. AMR ASSEMBLIES REQUIRED FOR THE METER.
3. A PRESSURE REDUCING VALVE (PRV) MUST BE INSTALLED BEFORE THE BACKFLOW PREVENTER IF THE AVERAGE SYSTEM PRESSURE EXCEEDS 175 PSI PRV SIZE SHALL MATCH LINE SIZE.
4. ALL REDUCED PRESSURE PRINCIPLE (RPZ) ASSEMBLIES ARE TO BE INSTALLED WITH A MIN. SWING CHECK VALVE IMMEDIATELY PRIOR TO THE ASSEMBLY. PRV AND SWING CHECK VALVE SHALL BE UL/FM APPROVED WHEN USED ON A FIRE LINE APPLICATION.
5. IN BUILDING INSTALLATION WILL "ONLY" BE ALLOWED WHERE EXISTING SITE CONDITIONS MAKE IT UNFEASIBLE TO COMPLY WITH CHART BELOW. APPROVAL WILL BE GRANTED ON A CASE BY CASE BASIS AND WILL REQUIRE THE EXECUTION OF AN ESTOPPEL CERTIFICATE BY THE OWNER / DEVELOPER.
6. ALL NON-METERED FIRE SERVICE MAINS SHALL HAVE A DETECTOR METER WITH A REMOTE READING DEVICE INSTALLED AT THE FACE OF THE BUILDING / ENCLOSURE OR TOP OF VAULT.
7. THERE SHALL BE A MINIMUM OF 12" SEPARATION OR FREE CLEARANCE BETWEEN THE SIDES AND BOTTOM OF THE ENCLOSURE / VAULT AND BACKFLOW ASSEMBLY.

FIRE LINE SIZE	INSIDE PIT DIMENSIONS			ACCESS DOOR SIZE
	LENGTH	WIDTH	DEPTH	
6 INCH	VARIES			DOUBLE LEAF 4'-0" x 4'-0"
8 INCH	SIZE VAULT SO THAT THE TOP IS A MINIMUM 6' FROM THE BOTTOM AND ALSO TO PROVIDE A MINIMUM 12" OF CLEARANCE FROM BOTTOM AND SIDES.			DOUBLE LEAF 4'-0" x 4'-0"
10 INCH				DOUBLE LEAF 4'-0" x 6'-0"

GENERAL INSTALLATION REQUIRMENTS

DEGREE OF HAZARD	TYPE OF SERVICE	TYPE OF BACKFLOW PREVENTI ON DEVICE	SIZE OF DEVICE	LOCATION REQUIREMENTS	INSTALLATION REQUIREMENTS
MODERATE	DOMESTIC	DOUBLE CHECK ASSEMBLY	⅝" TO 2"	WITHIN 15 FEET OF THE WATER METER	BELOW GROUND IN A LARGE METER BOX.
MODERATE	DOMESTIC	DOUBLE CHECK ASSEMBLY	2 1/2" & ABOVE	WITHIN 15 FEET OF THE WATER METER	BELOW GROUND IN A PRECAST DRAINABLE PIT.
HIGH	DOMESTIC / IRRIGATION	REDUCED PRESSURE ZONE ASSEMBLY	⅝" & ABOVE	WITHIN 15 FEET OF THE WATER METER	ABOVE GROUND INSULATED HEATED ENCLOSURE. HORIZONTAL INSTALLATION ONLY.
MODERATE	FIRE (UN-METERED) NO FDC	DOUBLE CHECK DETECTOR ASSEMBLY	2" & ABOVE	ADJACENT TO ROAD RIGHT-OF-WAY	BELOW GROUND IN A PRECAST DRAINABLE PIT
MODERATE	FIRE (METERED) NO FDC	DOUBLE CHECK ASSEMBLY	2" & ABOVE	WITHIN 15 FEET OF THE WATER METER	BELOW GROUND IN A PRECAST DRAINABLE PIT
HIGH	FIRE (UN-METERED)	REDUCED PRESSURE ZONE DETECTOR ASSEMBLY	2" & ABOVE	ADJACENT TO ROAD RIGHT-OF-WAY	ABOVE GROUND INSULATED HEATED ENCLOSURE. HORIZONTAL INSTALLATION ONLY.
HIGH	FIRE (METERED)	REDUCED PRESSURE ZONE ASSEMBLY	2" & ABOVE	ADJACENT TO ROAD RIGHT-OF-WAY	ABOVE GROUND INSULATED HEATED ENCLOSURE. HORIZONTAL INSTALLATION ONLY.

City of Asheville, NC
WATER ENGINEERING DIVISION

ABOVE GROUND BACKFLOW / ENCLOSURE

REVISIONS	
DATE	DESCRIPTION
10/2011	Note Revision

STD. NO.
W.08

FIRE LINE SIZE	INSIDE PIT DIMENSIONS			ACCESS DOOR SIZE
	LENGTH	WIDTH	DEPTH	
6 INCH	VARIES			DOUBLE LEAF 4'-0" x 4'-0"
8 INCH	SIZE VAULT SO THAT THE TOP IS A MINIMUM 6'-6" FROM THE BOTTOM AND ALSO TO PROVIDE A MINIMUM 12" OF CLEARANCE FROM BOTTOM AND SIDES.			DOUBLE LEAF 4'-0" x 4'-0"
10 INCH				DOUBLE LEAF 4'-0" x 6'-0"

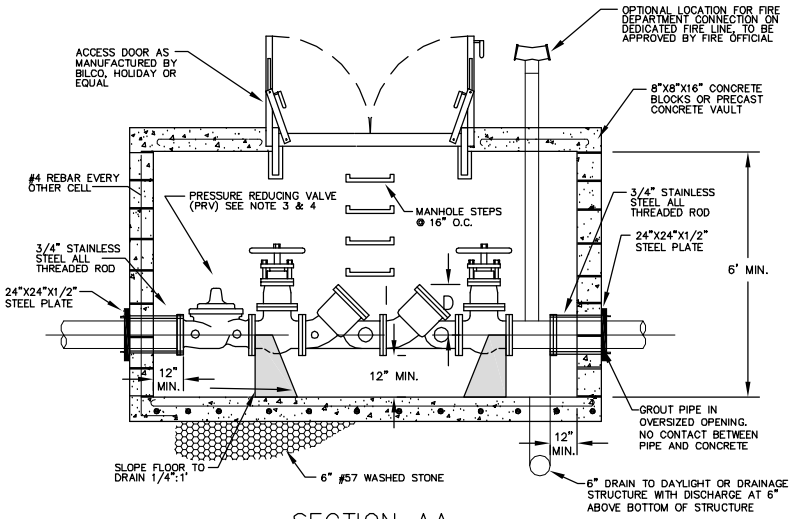

SECTION AA

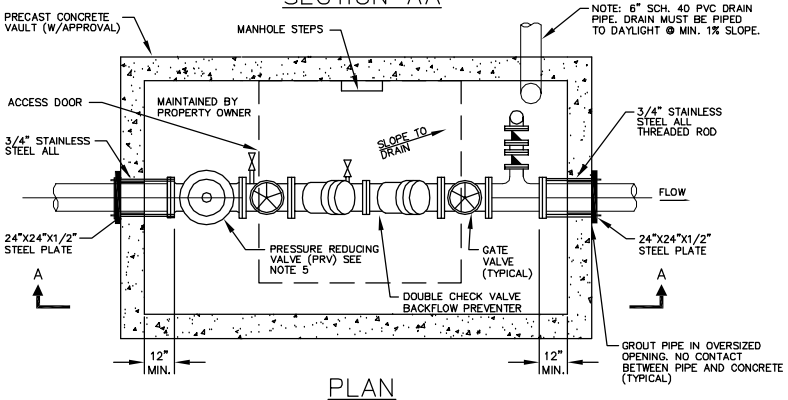

PLAN
NOT TO SCALE

GENERAL NOTES:

1. WHERE SPRINKLER SYSTEMS ARE USED, A FIRE DEPARTMENT CONNECTION SHALL BE PROVIDED ON THE BUILDING OR AS OTHERWISE APPROVED BY FIRE OFFICIAL. CONNECTION LOCATION(S) MUST BE APPROVED BY FIRE OFFICIAL.
2. AMR ASSEMBLIES REQUIRED FOR THE METER.
3. A PRESSURE REDUCING VALVE (PRV) MUST BE INSTALLED BEFORE THE BACKFLOW PREVENTER IF THE AVERAGE SYSTEM PRESSURE EXCEEDS 175 PSI PRV SIZE SHALL MATCH LINE SIZE.
4. ALL REDUCED PRESSURE PRINCIPLE (RPZ) ASSEMBLIES ARE TO BE INSTALLED WITH A MIN. SWING CHECK VALVE IMMEDIATELY PRIOR TO THE ASSEMBLY. PRV AND SWING CHECK VALVE SHALL BE UL/FM APPROVED WHEN USED ON A FIRE LINE APPLICATION.
5. IN BUILDING INSTALLATION WILL "ONLY" BE ALLOWED WHERE EXISTING SITE CONDITIONS MAKE IT UNFEASIBLE TO COMPLY WITH CHART BELOW. APPROVAL WILL BE GRANTED ON A CASE BY CASE BASIS AND WILL REQUIRE THE EXECUTION OF AN ESTOPPEL CERTIFICATE BY THE OWNER / DEVELOPER.
6. ALL NON-METERED FIRE SERVICE MAINS SHALL HAVE A DETECTOR METER WITH A REMOTE READING DEVICE INSTALLED AT THE FACE OF THE BUILDING / ENCLOSURE OR TOP OF VAULT.
7. THERE SHALL BE A MINIMUM OF 12" SEPARATION OR FREE CLEARANCE BETWEEN THE SIDES AND BOTTOM OF THE ENCLOSURE / VAULT AND BACKFLOW ASSEMBLY.

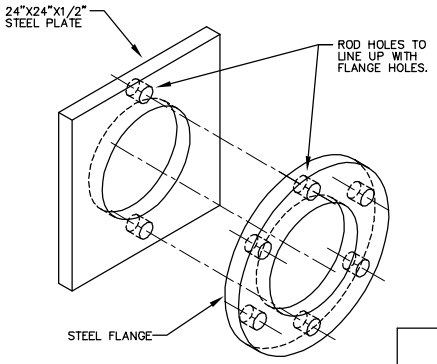

STEEL PLATE & FLANGE
NOT TO SCALE

GENERAL INSTALLATION REQUIRMENTS

DEGREE OF HAZARD	TYPE OF SERVICE	TYPE OF BACKFLOW PREVENTI ON DEVICE	SIZE OF DEVICE	LOCATION REQUIREMENTS	INSTALLATION REQUIREMENTS
MODERATE	DOMESTIC	DOUBLE CHECK ASSEMBLY	⅝" TO 2"	WITHIN 15 FEET OF THE WATER METER	BELOW GROUND IN A LARGE METER BOX.
MODERATE	DOMESTIC	DOUBLE CHECK ASSEMBLY	2 1/2" & ABOVE	WITHIN 15 FEET OF THE WATER METER	BELOW GROUND IN A PRECAST DRAINABLE PIT.
HIGH	DOMESTIC / IRRIGATION	REDUCED PRESSURE ZONE ASSEMBLY	⅝" & ABOVE	WITHIN 15 FEET OF THE WATER METER	ABOVE GROUND INSULATED HEATED ENCLOSURE. HORIZONTAL INSTALLATION ONLY.
MODERATE	FIRE (UN-METERED) NO FDC	DOUBLE CHECK DETECTOR ASSEMBLY	2" & ABOVE	ADJACENT TO ROAD RIGHT-OF-WAY	BELOW GROUND IN A PRECAST DRAINABLE PIT
MODERATE	FIRE (METERED) NO FDC	DOUBLE CHECK ASSEMBLY	2" & ABOVE	WITHIN 15 FEET OF THE WATER METER	BELOW GROUND IN A PRECAST DRAINABLE PIT
HIGH	FIRE (UN-METERED)	REDUCED PRESSURE ZONE DETECTOR ASSEMBLY	2" & ABOVE	ADJACENT TO ROAD RIGHT-OF-WAY	ABOVE GROUND INSULATED HEATED ENCLOSURE. HORIZONTAL INSTALLATION ONLY.
HIGH	FIRE (METERED)	REDUCED PRESSURE ZONE ASSEMBLY	2" & ABOVE	ADJACENT TO ROAD RIGHT-OF-WAY	ABOVE GROUND INSULATED HEATED ENCLOSURE. HORIZONTAL INSTALLATION ONLY.

City of Asheville, NC
WATER ENGINEERING DIVISION

BELOW GROUND BACKFLOW / ENCLOSURE

REVISIONS	
DATE	DESCRIPTION
10/2011	NOTE & VAULT REVISION

STD. NO.
W.09

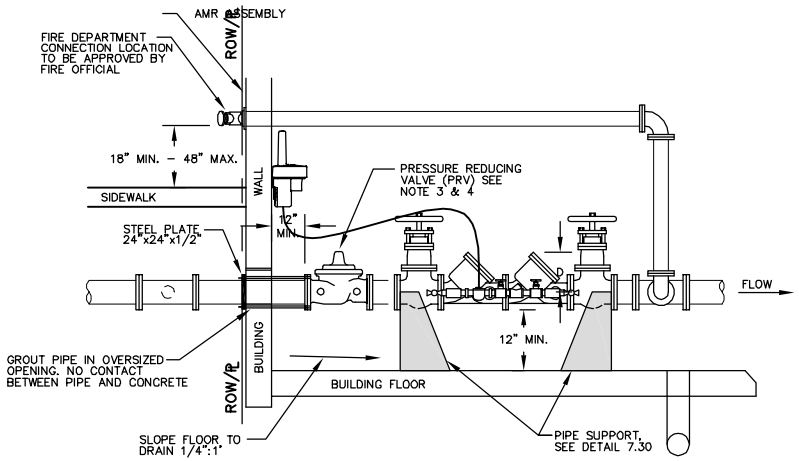

SECTION AA

NOT TO SCALE

GENERAL NOTES:

1. WHERE SPRINKLER SYSTEMS ARE USED, A FIRE DEPARTMENT CONNECTION SHALL BE PROVIDED ON THE BUILDING OR AS OTHERWISE APPROVED BY FIRE OFFICIAL. CONNECTION LOCATION(S) MUST BE APPROVED BY FIRE OFFICIAL.
2. AMR ASSEMBLIES REQUIRED FOR THE METER.
3. A PRESSURE REDUCING VALVE (PRV) MUST BE INSTALLED BEFORE THE BACKFLOW PREVENTER IF THE AVERAGE SYSTEM PRESSURE EXCEEDS 175 PSI PRV SIZE SHALL MATCH LINE SIZE.
4. ALL REDUCED PRESSURE PRINCIPLE (RPZ) ASSEMBLIES ARE TO BE INSTALLED WITH A MIN. SWING CHECK VALVE IMMEDIATELY PRIOR TO THE ASSEMBLY. PRV AND SWING CHECK VALVE SHALL BE UL/FM APPROVED WHEN USED ON A FIRE LINE APPLICATION.
5. IN BUILDING INSTALLATION WILL "ONLY" BE ALLOWED WHERE EXISTING SITE CONDITIONS MAKE IT UNFEASIBLE TO COMPLY WITH CHART BELOW. APPROVAL WILL BE GRANTED ON A CASE BY CASE BASIS AND WILL REQUIRE THE EXECUTION OF AN ESTOPPEL CERTIFICATE BY THE OWNER / DEVELOPER.
6. ALL NON-METERED FIRE SERVICE MAINS SHALL HAVE A DETECTOR METER WITH A REMOTE READING DEVICE INSTALLED AT THE FACE OF THE BUILDING / ENCLOSURE OR TOP OF VAULT.
7. THERE SHALL BE A MINIMUM OF 12" SEPARATION OR FREE CLEARANCE BETWEEN THE SIDES AND BOTTOM OF THE ENCLOSURE / BLDG AND BACKFLOW ASSEMBLY.

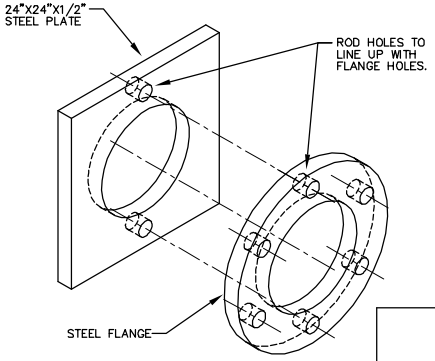

STEEL PLATE & FLANGE

NOT TO SCALE

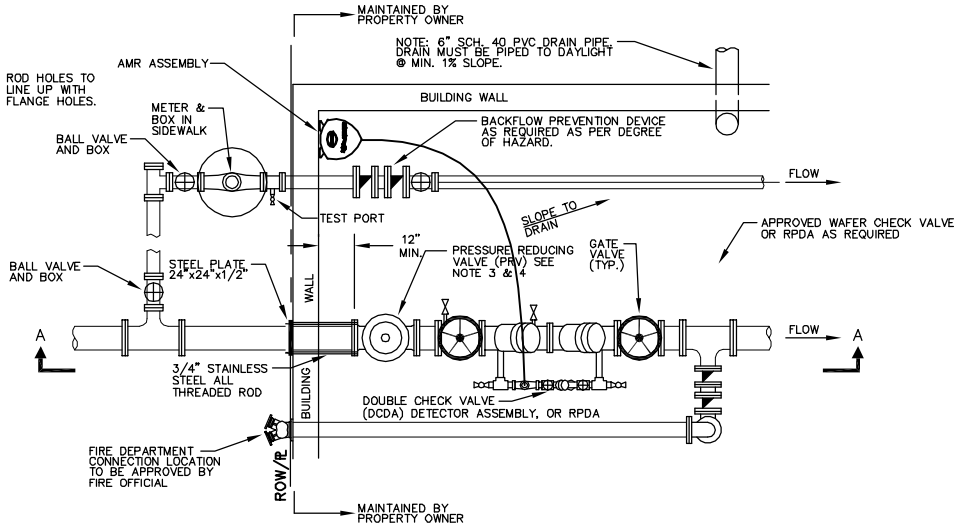

PLAN

NOT TO SCALE

GENERAL INSTALLATION REQUIRMENTS

DEGREE OF HAZARD	TYPE OF SERVICE	TYPE OF BACKFLOW PREVENTI ON DEVICE	SIZE OF DEVICE	LOCATION REQUIREMENTS	INSTALLATION REQUIREMENTS
MODERATE	DOMESTIC	DOUBLE CHECK ASSEMBLY	⅝" TO 2"	WITHIN 15 FEET OF THE WATER METER	BELOW GROUND IN A LARGE METER BOX.
MODERATE	DOMESTIC	DOUBLE CHECK ASSEMBLY	2 1/2" & ABOVE	WITHIN 15 FEET OF THE WATER METER	BELOW GROUND IN A PRECAST DRAINABLE PIT.
HIGH	DOMESTIC / IRRIGATION	REDUCED PRESSURE ZONE ASSEMBLY	⅝" & ABOVE	WITHIN 15 FEET OF THE WATER METER	ABOVE GROUND INSULATED HEATED ENCLOSURE. HORIZONTAL INSTALLATION ONLY.
MODERATE	FIRE (UN-METERED) NO FDC	DOUBLE CHECK DETECTOR ASSEMBLY	2" & ABOVE	ADJACENT TO ROAD RIGHT-OF-WAY	BELOW GROUND IN A PRECAST DRAINABLE PIT
MODERATE	FIRE (METERED) NO FDC	DOUBLE CHECK ASSEMBLY	2" & ABOVE	WITHIN 15 FEET OF THE WATER METER	BELOW GROUND IN A PRECAST DRAINABLE PIT
HIGH	FIRE (UN-METERED)	REDUCED PRESSURE ZONE DETECTOR ASSEMBLY	2" & ABOVE	ADJACENT TO ROAD RIGHT-OF-WAY	ABOVE GROUND INSULATED HEATED ENCLOSURE. HORIZONTAL INSTALLATION ONLY.
HIGH	FIRE (METERED)	REDUCED PRESSURE ZONE ASSEMBLY	2" & ABOVE	ADJACENT TO ROAD RIGHT-OF-WAY	ABOVE GROUND INSULATED HEATED ENCLOSURE. HORIZONTAL INSTALLATION ONLY.

City of Asheville, NC

WATER ENGINEERING DIVISION

INSIDE BUILDING BACKFLOW

REVISIONS	
DATE	DESCRIPTION
10/2011	NOTE REVISIONS

STD. NO.

W.10

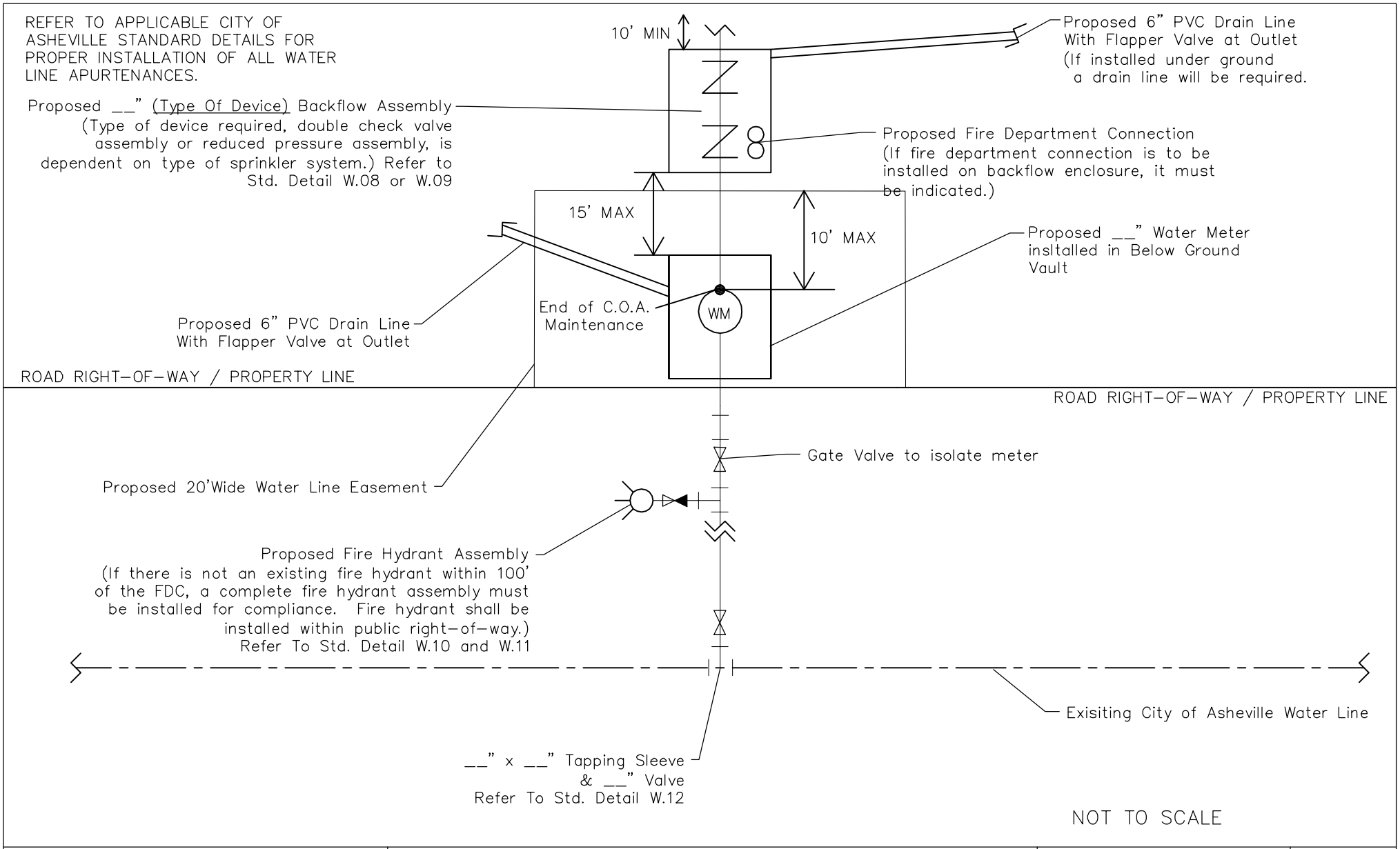

City of Asheville, NC
WATER ENGINEERING DIVISION

METERED FIRE LINE SCHEMATIC

REVISIONS	
DATE	DESCRIPTION
6/2009	New Drawing
10/2011	Notes / Easement Revision

STD. NO.
W.11

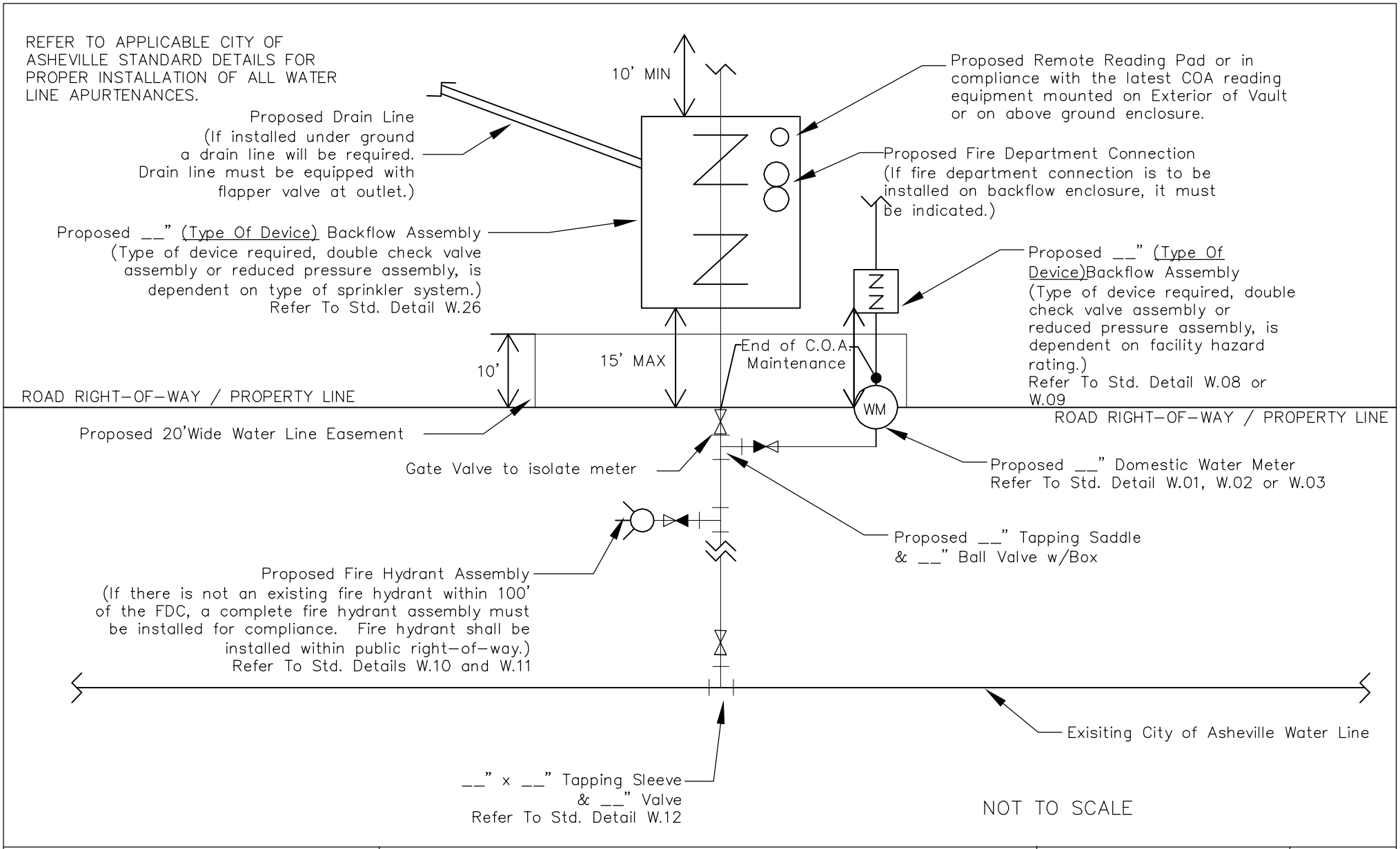

City of Asheville, NC WATER ENGINEERING DIVISION	DEDICATED FIRE LINE SCHEMATIC	REVISIONS DATE: 6/2009 DESCRIPTION: New Drawing	STD. NO. W.12

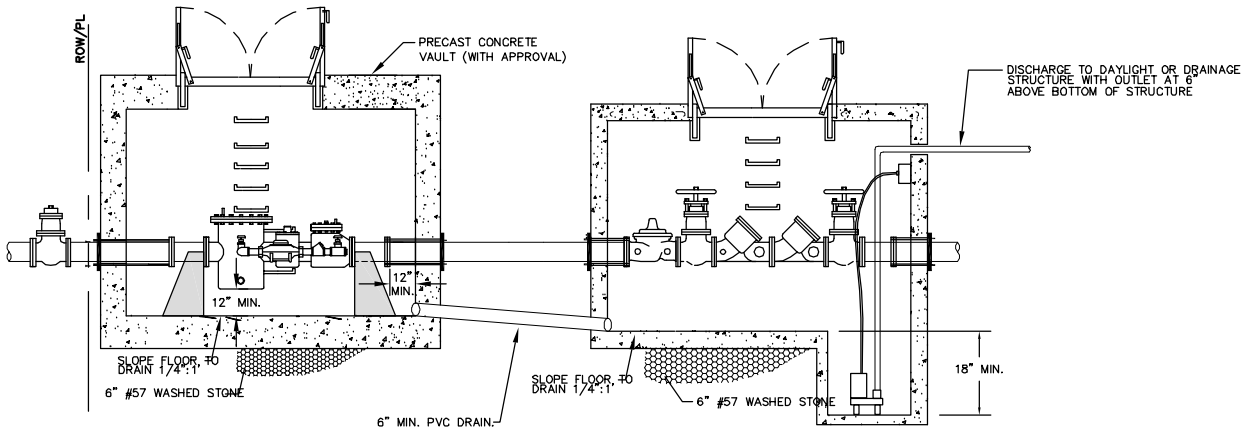

OPTION ONE

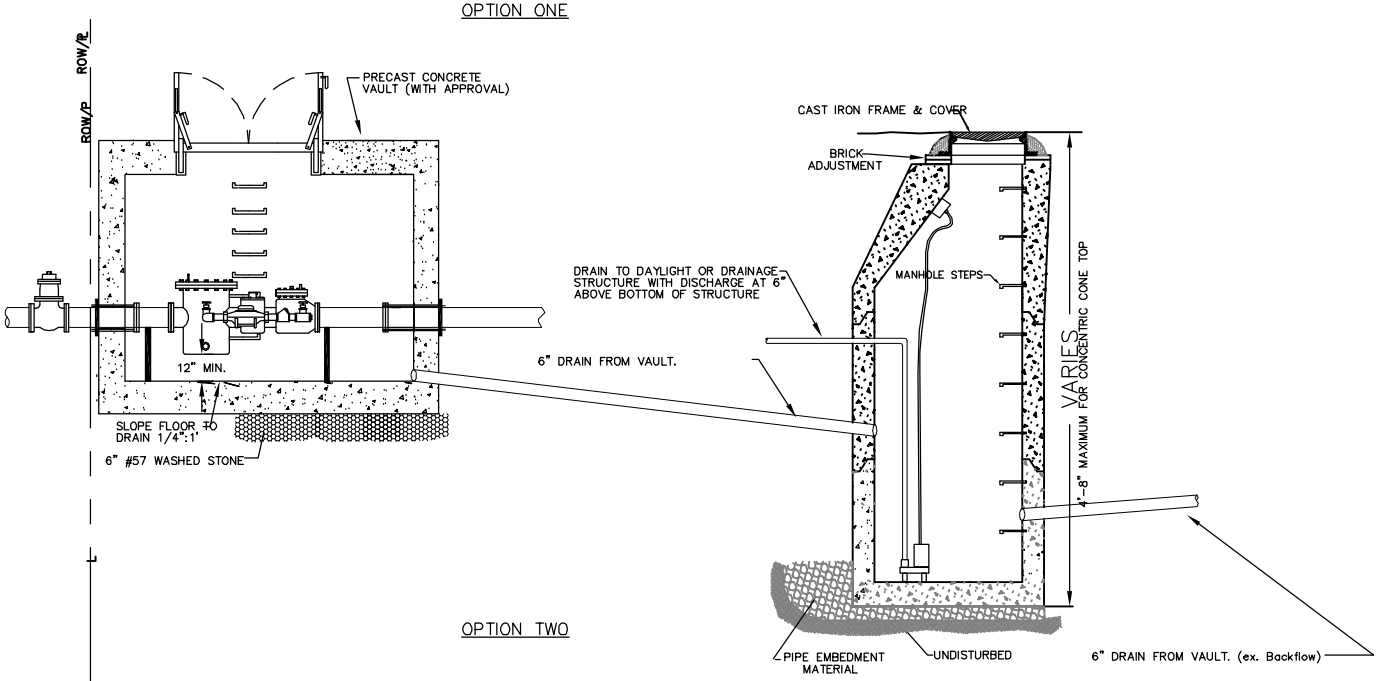

OPTION TWO

GENERAL NOTES:

1. SUMP PUMPS MAY ONLY BE USED WHEN IT IS IMPOSSIBLE TO DRAIN VAULT(S) TO DAYLIGHT OR DRAINAGE SYSTEM VIA GRAVITY.
2. SUMP PUMP CAN BE PLACED IN BACKFLOW VAULT WITH METER VAULT DRAINING INTO BACK FLOW VAULT. (OPTION 1)
3. IN CASES WHERE BACKFLOW VAULT IS HIGHER THEN METER VAULT OPTION 2 MUST BE USED.(OPTION 2)
4. ALL 6" DRAINS MUST BE MIN. 1% SLOPE BETWEEN VAULTS OR TO THE SUMP MAN HOLE.
5. ALL SUMP PUMP DISCHARGE LINES MUST BE A MIN. OF 1.5" PIPE DISCHARGING TO DAY LIGHT OR TO A STORM DRAIN STRUCTURE WITH A FLAP VALVE AND A MINIMUM OF 6" ABOVE BOTTOM OF STRUCTURE IF THE LINE IS EMPTING INTO A STORM SEWER.
6. SUMP PUMP INSTALLATION SHALL BE IN ACCORDANCE TO NC BUILDING CODE REQUIREMENTS AND SHALL BE INSPECTED AND APPROVED BY APPROPRIATE BUILDING CODE OFFICIAL.

City of Asheville, NC
WATER ENGINEERING DEPARTMENT

SUMP PUMP FOR VAULTS / MANHOLES

REVISIONS	
DATE	DESCRIPTION

STD. NO.
W.13

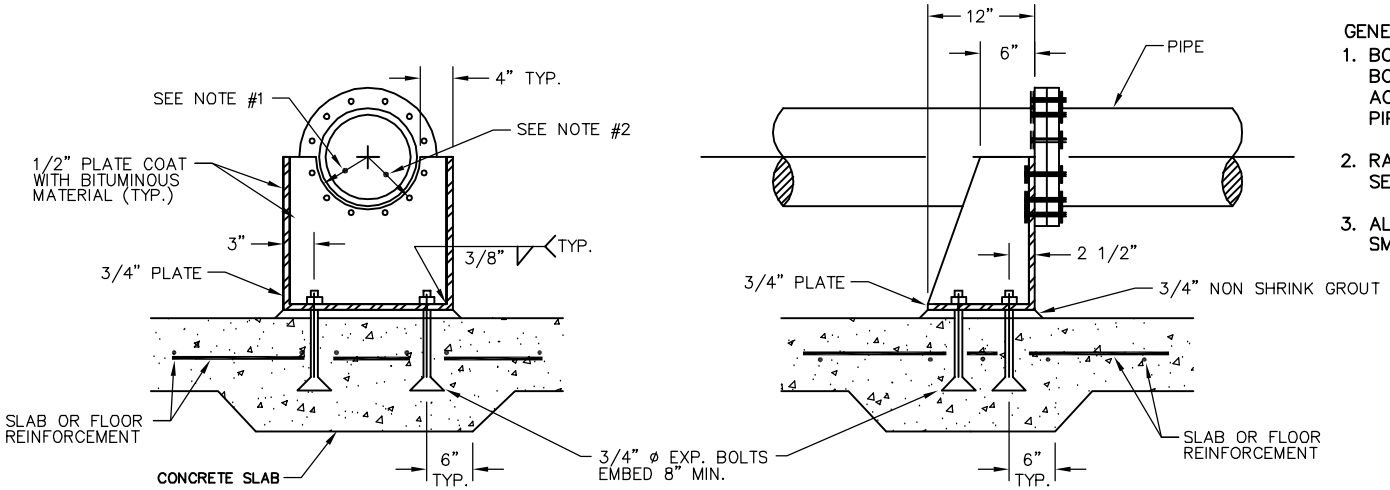

METAL PIPE SUPORT
NOT TO SCALE

GENERAL NOTES:

1. BOLT CIRCLE IN 1/2" PLATE AND BOLT DIAMETER SHALL BE SET IN ACCORDANCE WITH BOLT CIRCLE OF PIPE FLANGE AND FLANGE BOLTS.
2. RADIUS OF 1/2" PLATE SHALL BE SET BY RADIUS OF PIPE O.D.
3. ALL WELDS SHALL BE GROUND SMOOTH.

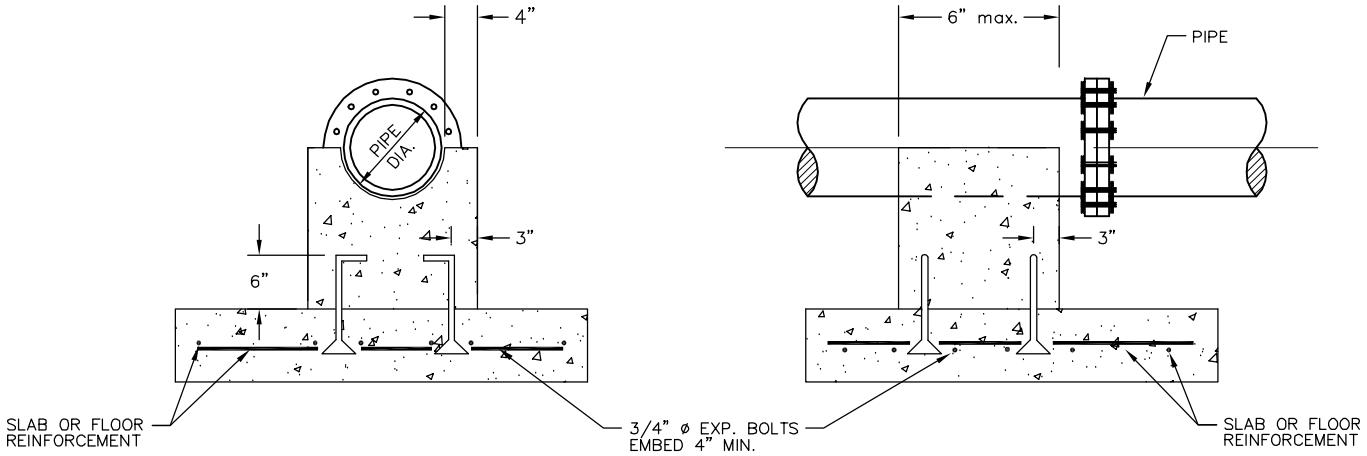

CONCRETE PIPE SUPORT
NOT TO SCALE

City of Asheville, NC
WATER ENGINEERING DIVISION

METAL / CONCRETE PIPE SUPPORT DETAIL

REVISIONS	
DATE	DESCRIPTION
6/2009	REVISED DETAIL FROM 6.28

STD. NO.
W.14

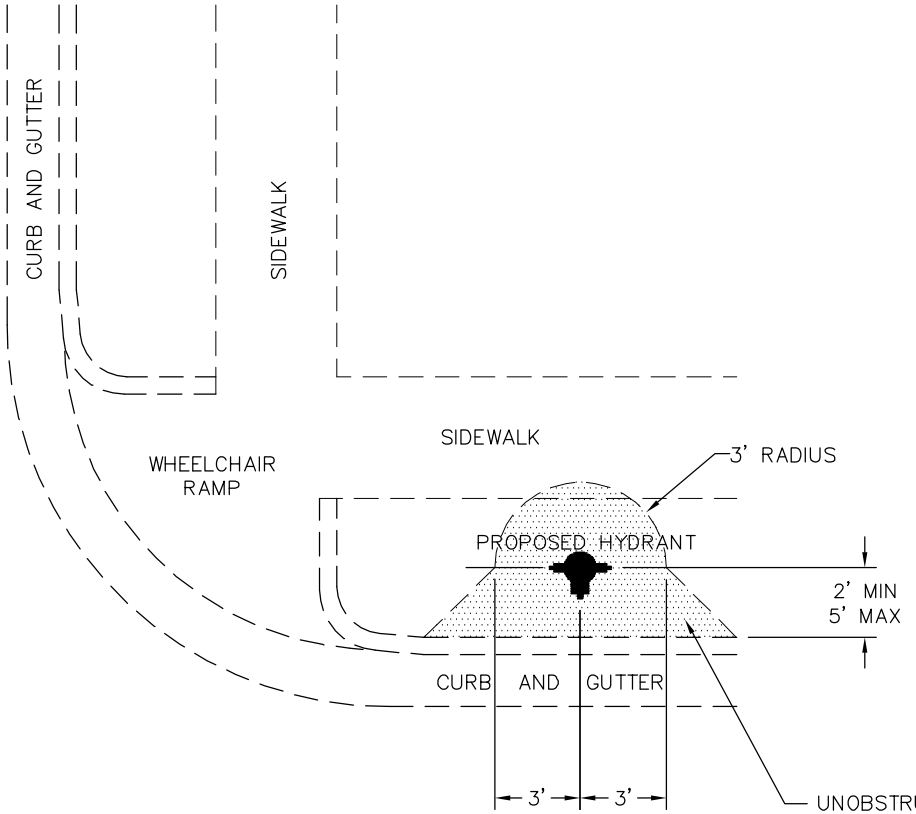

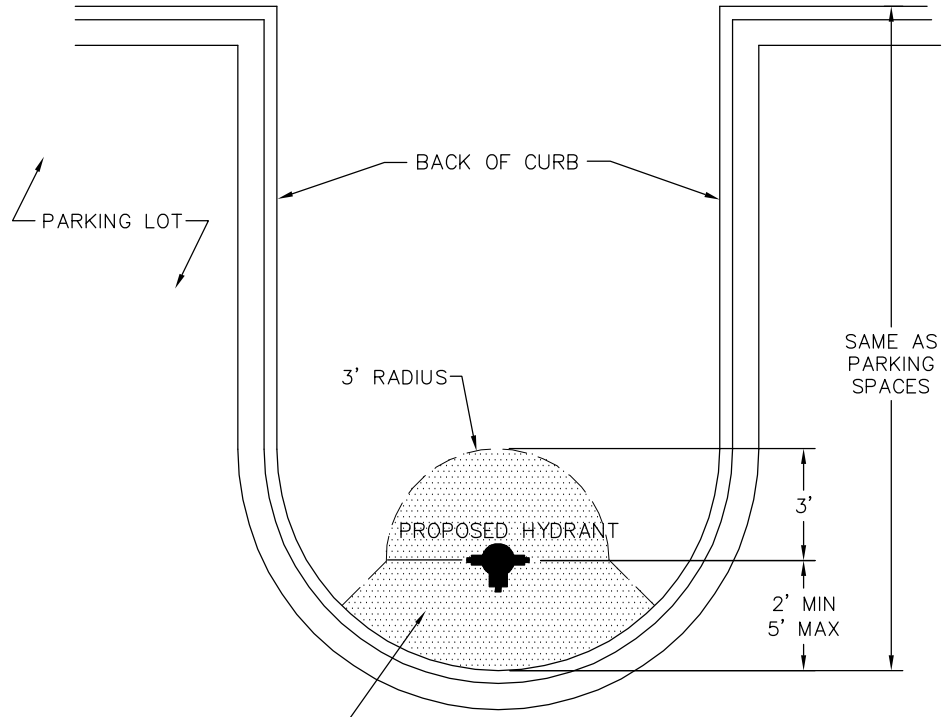

UNOBSTRUCTED ARE MUST ALSO BE FLAT TO ALLOW ACCESS TO AND OPERATION OF THE FIRE HYDRANT.

GENERAL NOTES:

1. LOCATION SHOULD BE COORDINATED WITH NCDOT ALONG STATE MAINTAINED ROADWAYS.
2. OBSTRUCTION FREE AREA SHALL APPLY TO ALL LOCATIONS FOR FIRE HYDRANT INSTALLATION.
3. HYDRANT LOCATION SHALL NOT INTERFERE WITH THE REQUIREMENTS OF THE NORTH CAROLINA BUILDING CODE.
4. CONCRETE BOLLARDS WILL BE REQUIRED FOR INSTALLATION WITHIN PARKING AREAS

City of Asheville, NC
WATER ENGINEERING DIVISION

STANDARD HYDRANT LOCATION

REVISIONS	
DATE	DESCRIPTION
6/2009	REVISED DETAIL FROM 6.07

STD. NO.
W.15

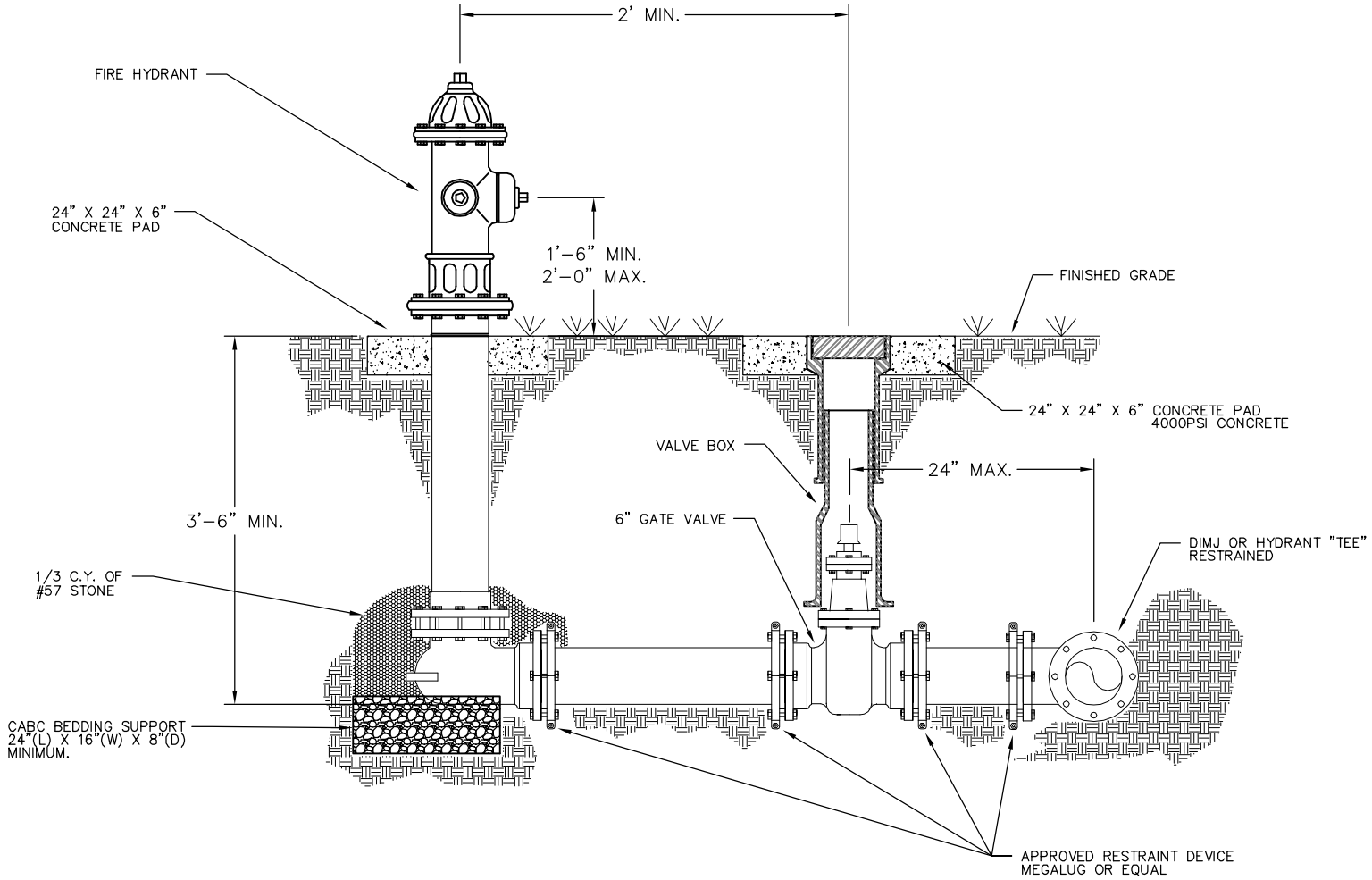

City of Asheville, NC

WATER ENGINEERING DIVISION

FIRE HYDRANT INSTALLATION

REVISIONS	
DATE	DESCRIPTION
6/2009	REVISED DETAIL FROM 6.05

STD. NO.

W.16

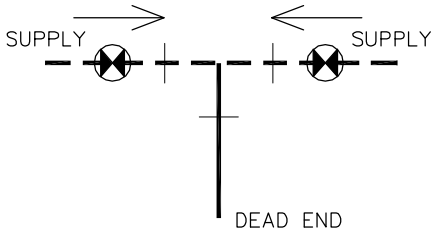

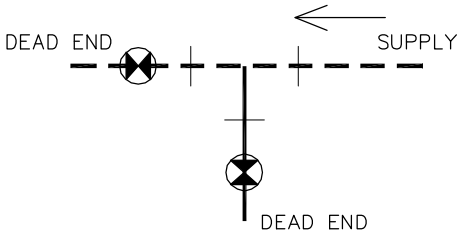

NOTES:

1. WHEN THERE IS ONLY ONE SUPPLY LEG FEEDING TWO DEAD END LEGS, PLACE VALVES ON DEAD END LEGS.
2. WHEN THERE ARE TWO SUPPLY LEGS FEEDING ONE DEAD END LEG, PLACE VALVES ON SUPPLY LEGS.
3. WHEN ALL THREE LEGS ARE SUPPLY,ENGINEER'S CHOICE.
4. CITY MAY DESIGNATE A CURRENT DEAD END LEG AND A FUTURE SUPPLY LEG ACCORDING TO WATER PLANNING AND REQUIRE VALVE PLACEMENT ACCORDINGLY.
5. ON HYDRANT TEE, ONE VALVE IS ALWAYS ON HYDRANT LEG.

TWO VALVES AT A TEE

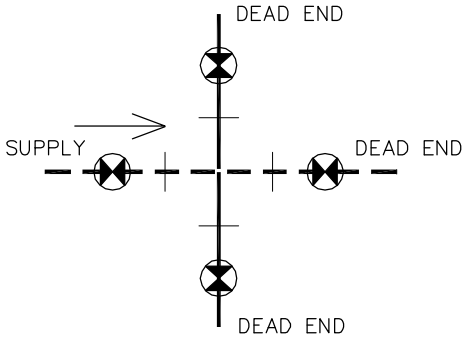

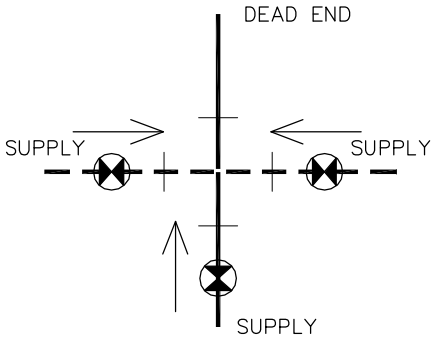

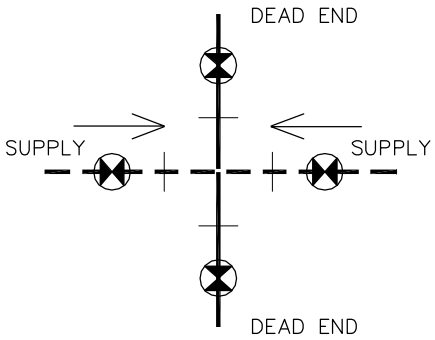

NOTES:

1. WHEN THERE IS ONLY ONE SUPPLY AND THREE DEAD END LEGS, PLACE VALVES ON DEAD END LEGS.
2. WHEN THERE ARE THREE SUPPLY LEGS AND ONE DEAD END LEG, PLACE VALVES ON SUPPLY LEGS.
3. WHEN THERE ARE TWO SUPPLY LEGS AND TWO DEAD END LEGS, PLACE VALVES ON ALL FOUR LEGS.
4. CITY MAY REQUIRE VALVE PLACEMENT BASED ON CURRENT OR FUTURE NEEDS.
5. WHEN ONE LEG AT A INTERSECTION IS A HYDRANT LEG,VALVE MUST BE PLACED ON A HYDRANT LEG. VALVING ON REMAINING LEGS TO BE PLACED AS THOUGH THEY MADE UP A TEE.
6. A "SUPPLY LEG" IS ANY LEG CONNECTED TO THE TREATED WATER SOURCE BY PIPING EQUAL AND OR GREATER THAN ITS SIZE AND SEPARATE FROM THE TEE OR CROSS BEING CONSIDERED.

THREE AND FOUR VALVES AT A INTERSECTION

City of Asheville, NC WATER ENGINEERING DIVISION	TYPICAL VALVING CONFIGURATION	REVISIONS		STD. NO.
		DATE	DESCRIPTION	W.17
		6/2009	REVISED DETAIL FROM 6.17	

GENERAL NOTES:

1. VALVE BOX SHALL NOT CONTACT WATER MAIN OR VALVE.
2. VALVE PAD REQUIREMENTS SHALL NOT BE APPLICABLE FOR IMPROVED PAVED SURFACES.
3. VALVE BOX ADJUSTMENT MUST BE DONE BY ADJUSTING/RAISING THE TOP SECTION OF THE EXISTING ADJUSTABLE SCREW-TYPE VALVE BOX TO GRADE OR BY INSTALLING A NEW VALVE BOX TOP SECTION. THE USE OF PAVING RINGS OR ADJUSTING C.I. SLEEVES IS NOT ALLOWED.

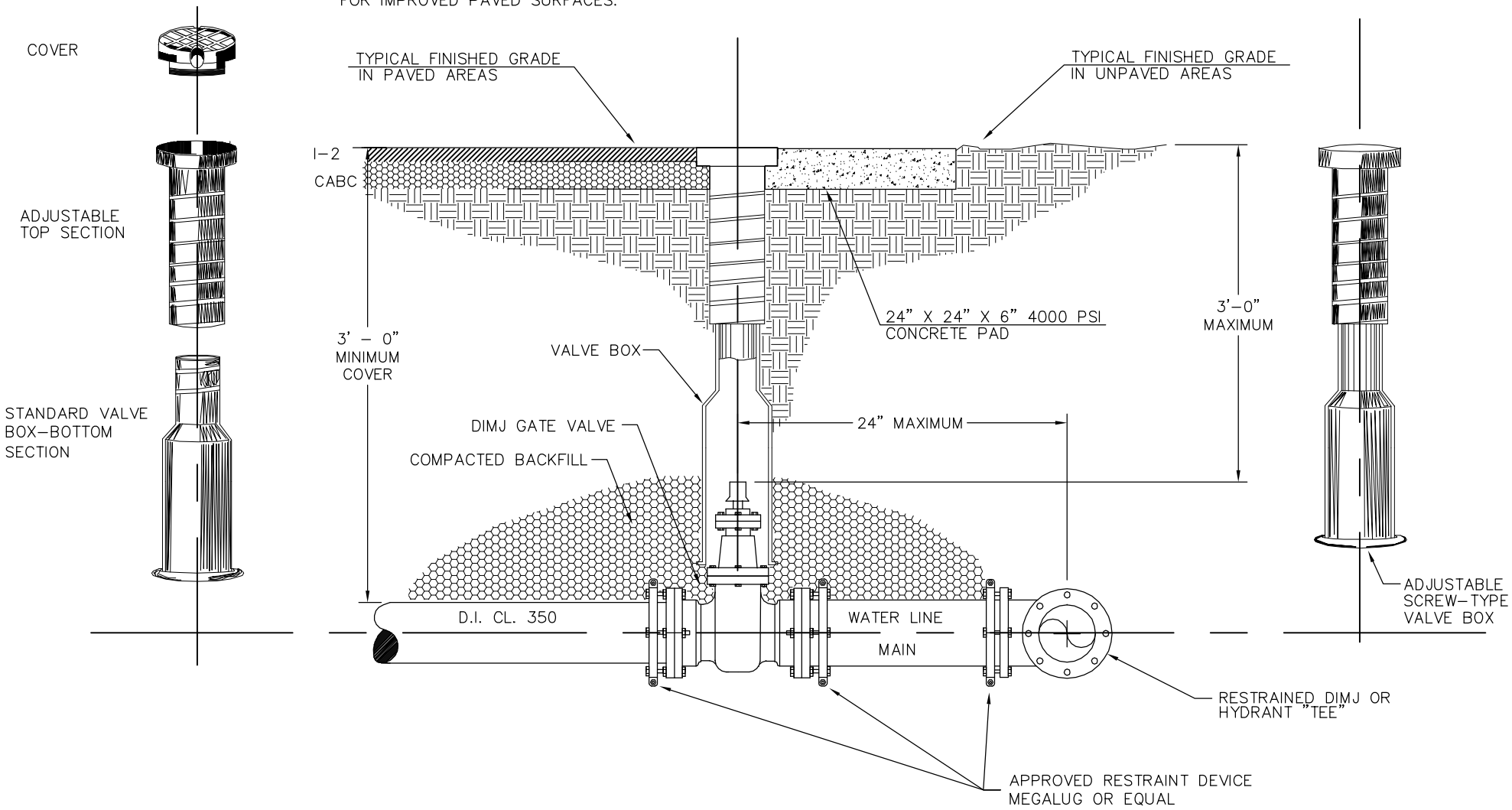

City of Asheville, NC
WATER ENGINEERING DIVISION

TYPICAL VALVE & VALVE BOX INSTALLATION / ADJUSTMENT

REVISIONS	
DATE	DESCRIPTION
6/2009	REVISED DETAIL FROM 6.06

STD. NO.
W.18

GENERAL NOTES:

1. VALVE BOX NOT TO CONTACT WATER MAIN OR VALVE OR COMPACTED BACKFILL UNDER VALVE BOX.
2. ALL FITTINGS AND APPURTENANCES SHALL BE RESTRAINED AS PER SPECIFICATIONS IN LIEU OF THRUST BLOCKING.
2. VALVE PAD REQUIREMENTS SHALL NOT BE APPLICABLE FOR IMPROVED PAVED SURFACES.
3. VALVE BOX ADJUSTMENT MUST BE DONE BY ADJUSTING/RAISING THE TOP SECTION OF THE EXISTING ADJUSTABLE SCREW-TYPE VALVE BOX TO GRADE OR BY INSTALLING A NEW VALVE BOX TOP SECTION. THE USE OF PAVING RINGS OR ADJUSTING C.I. SLEEVES IS NOT ALLOWED.

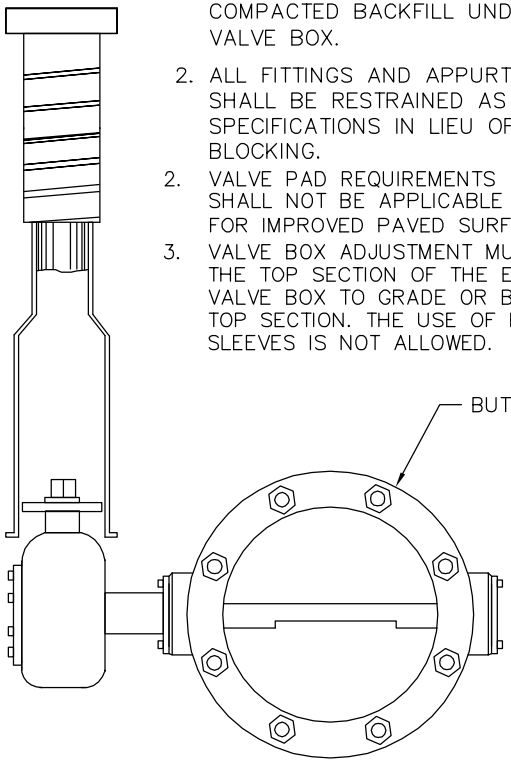

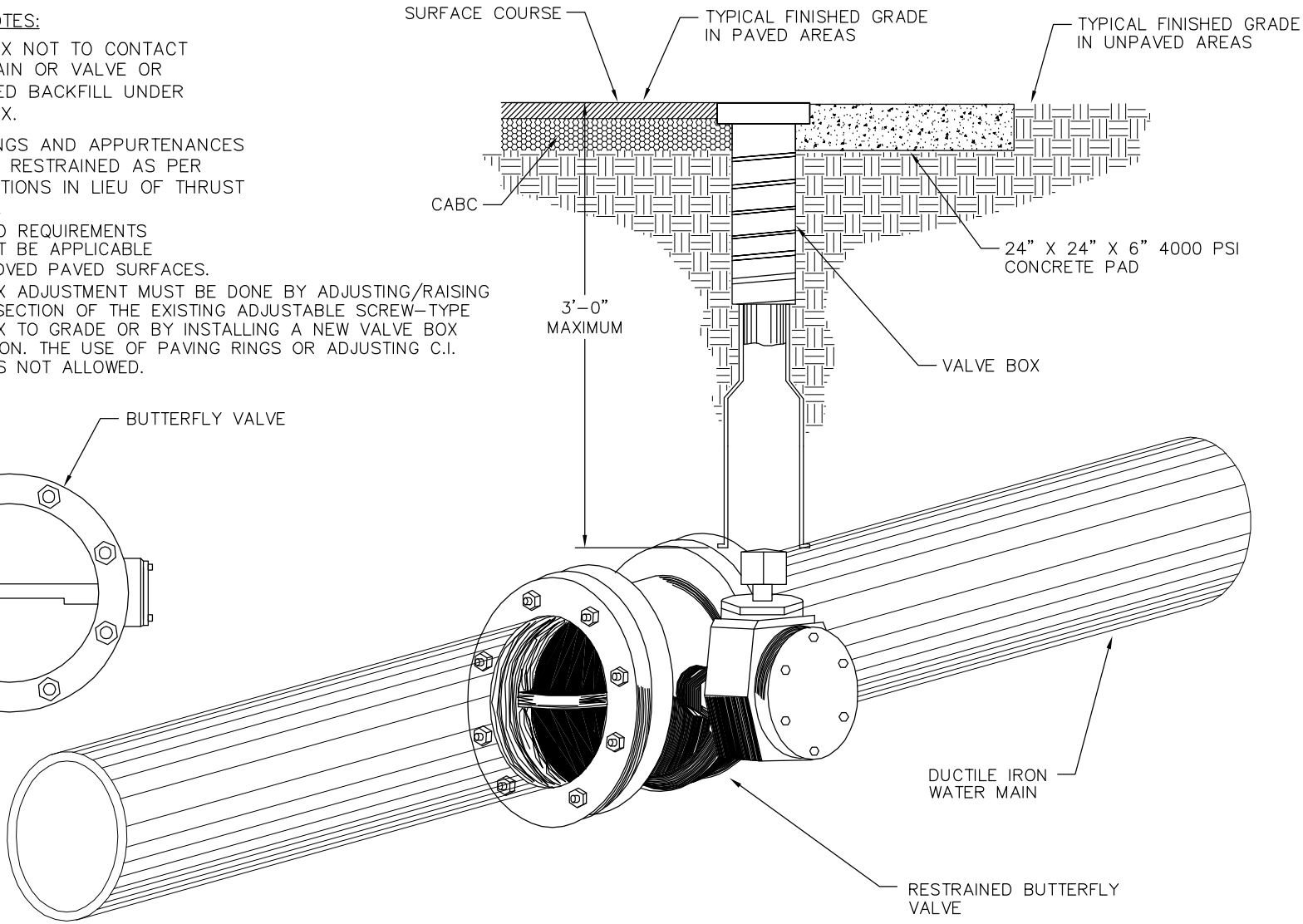

City of Asheville, NC
WATER ENGINEERING DIVISION

TYPICAL BUTTERFLY VALVE INSTALLATION

REVISIONS	
DATE	DESCRIPTION
6/2009	REVISED DETAIL FROM 6.20

STD. NO.
W.19

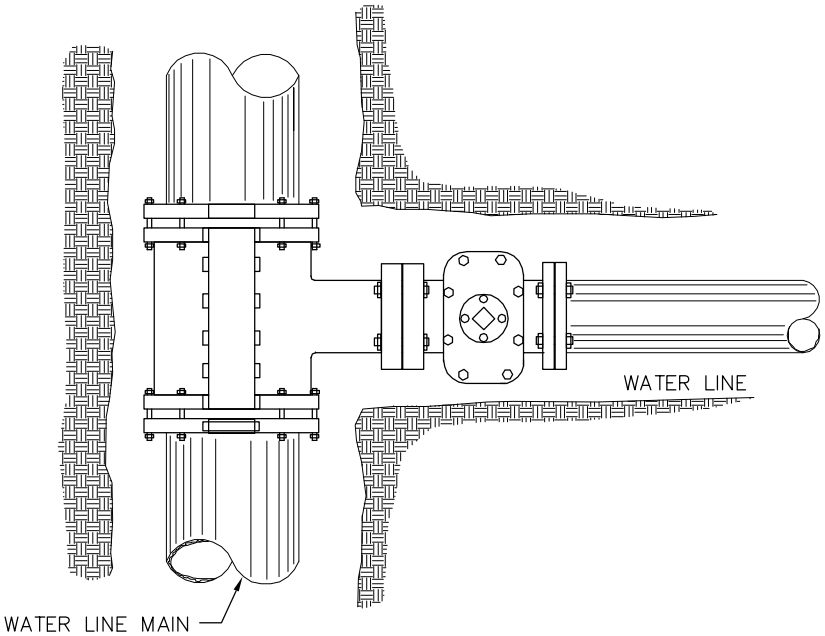

PLAN

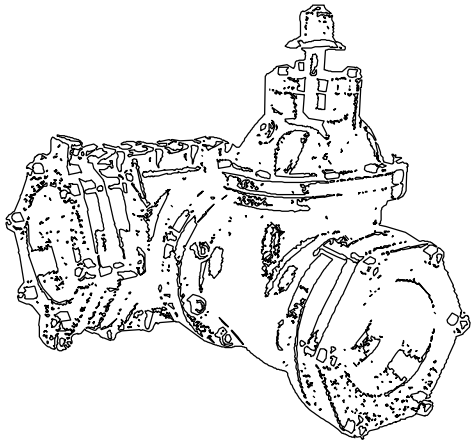

TAPPING SLEEVE

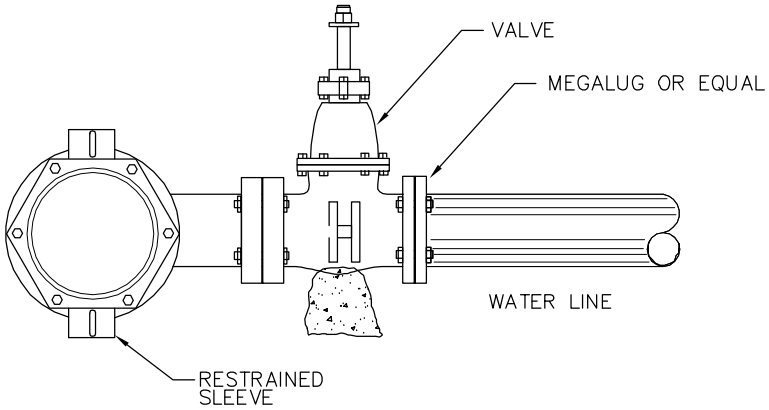

ELEVATION

NOTES:

1. TAPPING SLEEVE WILL BE MUELLER #H-615 OR APPROVED EQUAL.
2. APPROVED RESILIENT SEAT TAPPING VALVE.
3. SOLID CONCRETE OR BRICK BLOCKING WILL BE USED AS FOOTING FOR DUCTILE IRON PIPE.
4. ALL FITTINGS AND APPURTENANCES SHALL BE RESTRAINED AS PER IN LIEU OF THRUST BLOCKING SPECIFICATIONS

City of Asheville, NC
WATER ENGINEERING DIVISION

TAPPING SLEEVE AND VALVE ASSEMBLY

REVISIONS	
DATE	DESCRIPTION
6/2009	REVISED DETAIL FROM 6.22

STD. NO.
W.20

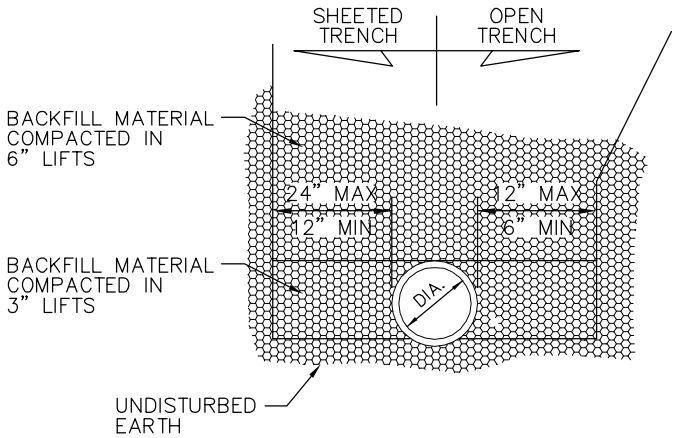

STANDARD EXCAVATION

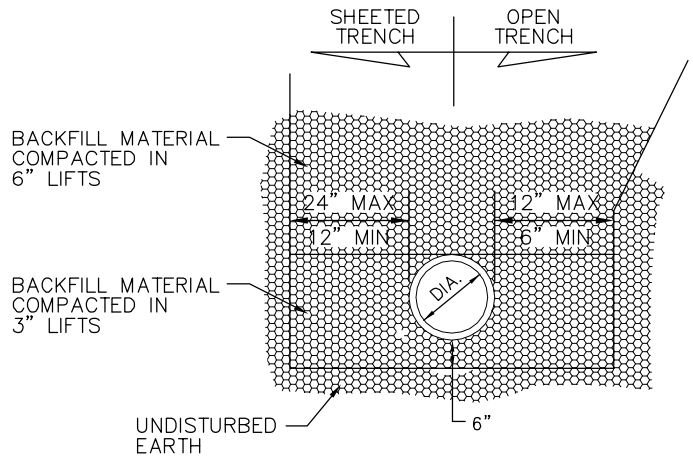

OVERCUT EXCAVATION

NOTE:
BELL HOLES NOT SHOWN

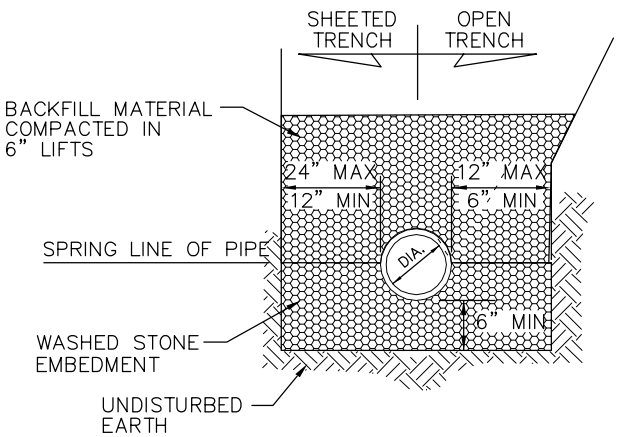

STANDARD EXCAVATION
IN WET CONDITIONS

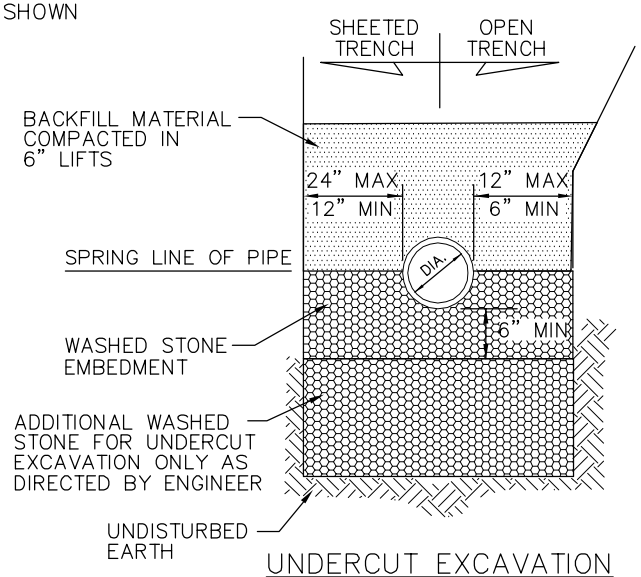

UNDERCUT EXCAVATION
IN UNSTABLE SOILS TYPES

GENERAL NOTES:

1. CONSTRUCTION OF TRENCHES SHALL BE IN ACCORDANCE WITH THE LATEST OSHA REGULATIONS. CONTRACTOR SHALL BE RESPOSIBLE FOR COMPLIANCE WITH ALL APPLICABLE REGULATIONS.
2. NO BOULDERS OR STONES IN EXCESS OF 4" IN SIZE SHALL BE USED AS PART OF THE INITIAL BACKFILL.
3. PIPE BEDDING MATERIAL SHALL BE # 57 WASHED STONE.
4. SELECT BACKFILL MATERIAL SHALL BE CLASS I OR II AS PER NCDOT STANDARD SPECIFICATIONS.

City of Asheville, NC
WATER ENGINEERING DIVISION

TYPICAL TRENCH DETAIL

REVISIONS	
DATE	DESCRIPTION
6/2009	REVISED DETAIL FROM 6.19

STD. NO.
W.21

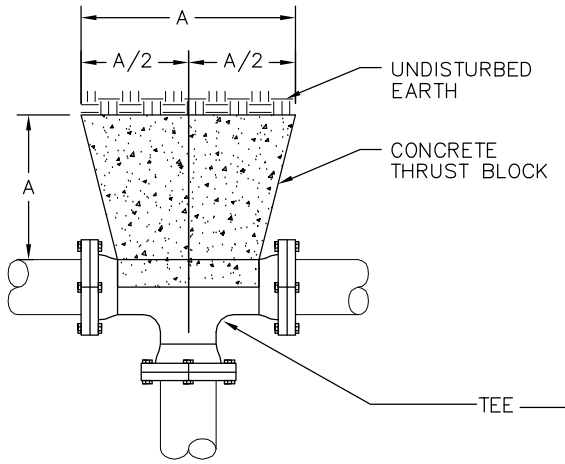

TOP VIEW

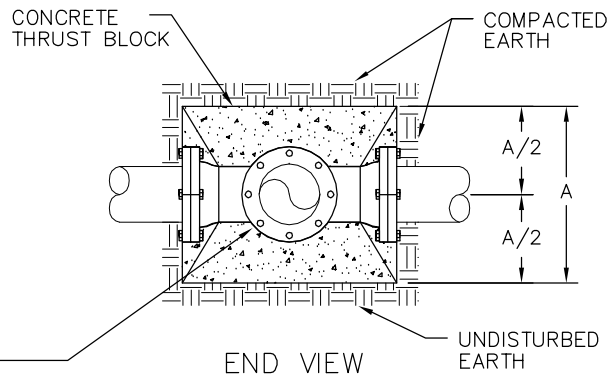

END VIEW

RECOMMENDED MINIMUM RESTRAINED LENGTH REQUIRED EACH SIDE OF FITTING (FEET)

FITTING TYPE	SIZE	WORKING PRESSURE (PSI)			
		125	150	175	200
HORIZ. 11 1/4 DEG.	6"	4	4	5	6
	8"	5	6	7	8
	10"	6	7	8	9
HORIZ. 22 1/2 DEG.	6"	7	9	10	12
	8"	10	12	14	16
	10"	12	14	17	19
REDUCER	8"X6"	14	17	20	23
	10"X8"	14	17	20	23
	12"X10"	14	17	20	23
HORIZ. 45 DEG.	6"	16	19	22	25
	8"	20	24	28	33
	10"	25	30	35	40
DEAD END	6"	26	31	36	41
	8"	34	41	48	55
	10"	42	50	58	67
TEE	TO BE CALCULATED ON A CASE BY CASE BASIS.				
90 DEG. VERT. BENDS	TO BE CALCULATED ON A CASE BY CASE BASIS.				

= 1 JOINT EQUIVALENT = 2 JOINTS EQUIVALENT

= 3 JOINTS EQUIVALENT = 4 JOINTS EQUIVALENT

GENERAL NOTES:

1. RESTRAINED JOINTS BY AN APPROVED PIPE MANUFACTURER ARE TO BE USED FOR ALL PUBLIC WATERLINES. THRUST BLOCKS ARE PERMITTED WHERE THE USE OF MECHANICAL RESTRAINT IS NOT FEASIBLE.
2. DIMENSION TABLE GIVEN IS A GUIDE ONLY. TO ENGINEER SHALL BE RESPONSIBLE TO CALCULATE THRUST BLOCK DIMENSIONS AND/OR BASED ON RESTRAINED LENGTH ACTUAL SOIL AND OPERATING PRESSURE CONDITIONS.
3. FITTING JOINTS SHALL BE KEPT FREE OF CONCRETE. A LAYER OF POLYETHYLINE PLASTIC SHALL BE PLACED BETWEEN THE FITTING AND THE CONCRETE.
4. PRE-CAST THRUST BLOCKS ARE NOT ACCEPTABLE.
5. CONCRETE SHALL HAVE 4000 P.S.I. COMPRESSIVE STRENGTH.

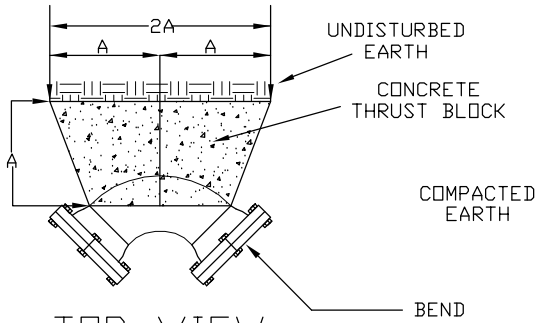

TOP VIEW

TABLE OF "A" DIMENSIONS (IN FEET)

BEND		90	45	22 1/2	11 1/4	TEE
PIPE SIZE (NOMINAL DIAMETER IN INCHES)	6	1.4	1.1	1.0	1.0	1.2
	8	1.9	1.5	1.5	1.5	1.6
	10	2.4	1.8	1.8	1.8	2.0
	12	2.8	2.1	2.0	2.0	2.4
	16	3.8	2.8	2.5	2.5	2.8
	24	5.6	4.2	3.0	3.0	4.5

City of Asheville, NC
WATER ENGINEERING DIVISION

THRUST BLOCK FOR FITTINGS & RESTRAINING REQUIREMENTS

REVISIONS	
DATE	DESCRIPTION
6/2009	REVISED DETAIL FROM 6.13
10/2011	NOTE 1 REVISED

STD. NO.

W.22

GENERAL NOTES

1. ALL FITTINGS MUST BE RESTRAINED AS SPECIFIED IN THE STANDARD SPECIFICATIONS AND DETAILS MANUAL
2. DIMENSION TABLE GIVEN IS A GUIDE ONLY. ENGINEER SHALL BE RESPONSIBLE TO CALCULATE THRUST BLOCK DIMENSIONS BASED ON ACTUAL SOIL AND OPERATING
3. FITTING JOINTS SHALL BE KEPT FREE OF CONCRETE. A LAYER OF POLYETHYLINE PLASTIC SHALL BE PLACED BETWEEN THE FITTING AND THE CONCRETE.
4. CONTRACTOR HAS THE OPTION TO RESTRAIN PIPE JOINTS IN LIEU OF CONCRETE DEADMAN & RODDING.

	PIPE SIZE (NOMINAL DIAMETER IN INCHES)						
	6	8	10	12	16	24	
"A" DIMEN. IN FEET	1.2	1.6	2.0	2.4	2.8	4.5	

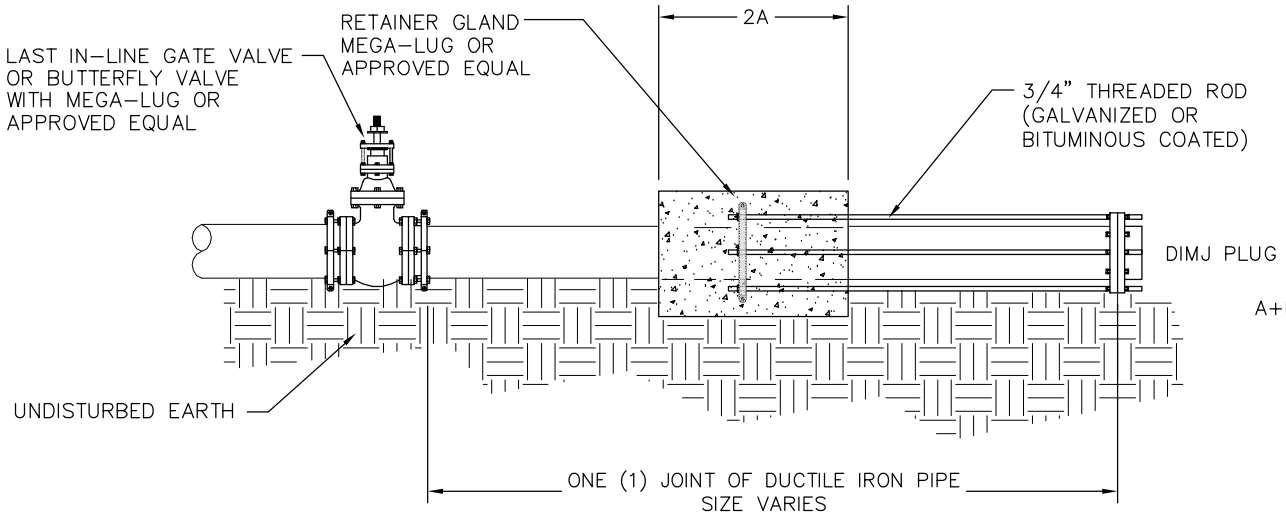

SIDE VIEW

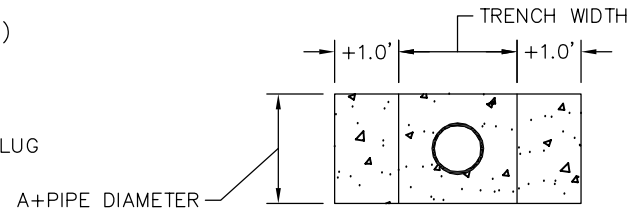

END VIEW

City of Asheville, NC
WATER ENGINEERING DIVISION

END OF LINE PLUG

REVISIONS	
DATE	DESCRIPTION
6/2009	REVISED DETAIL FROM 6.14

STD. NO.
W.23

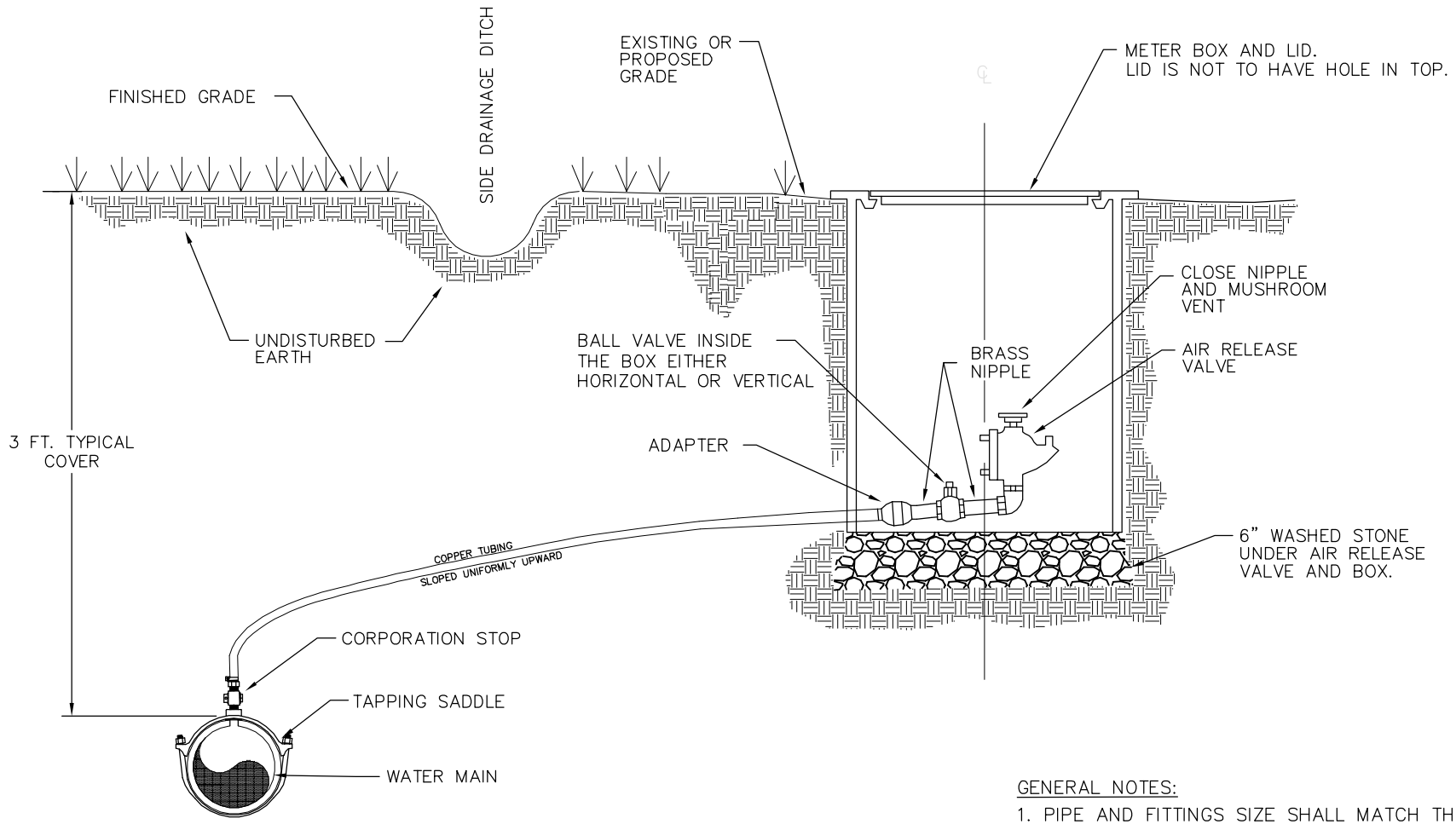

GENERAL NOTES:

1. PIPE AND FITTINGS SIZE SHALL MATCH THE SIZE OF THE PROPOSED AIR RELEASE VALVE TO BE INSTALLED.
2. REFER TO STANDARD DETAIL FOR METER BOX SPECIFICATIONS.
3. LOCATION TO BE SAME AS METER BOX DETAILS W.01 & W.05

City of Asheville, NC
WATER ENGINEERING DIVISION

STANDARD AIR RELEASE VALVE INSTALLATION

REVISIONS	
DATE	DESCRIPTION
6/2009	REVISED DETAIL FROM 6.10

STD. NO.
W.24

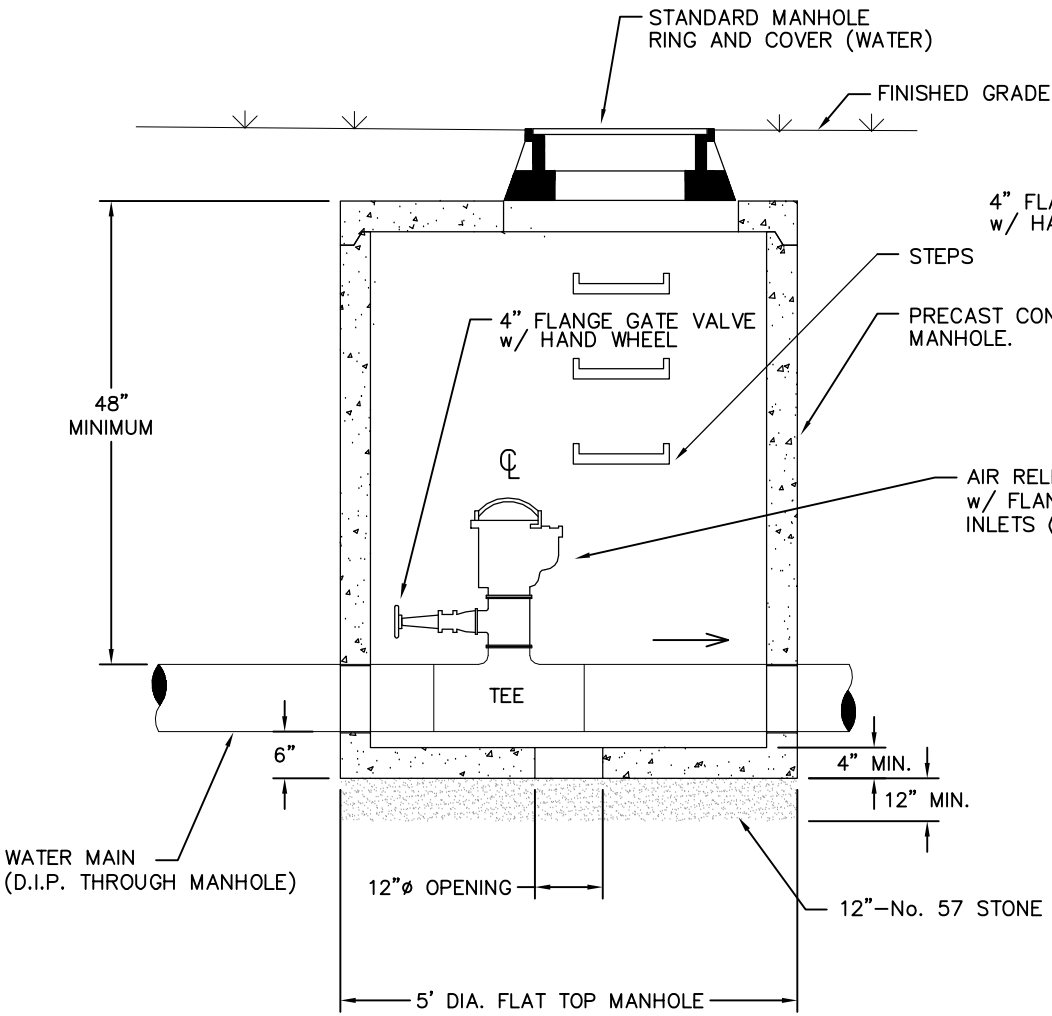

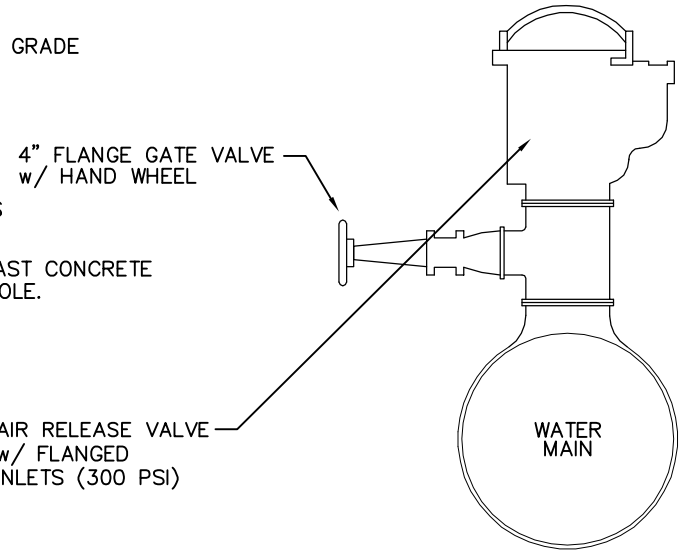

PIPING DETAIL

NOTES:

1. MANHOLE STEPS SHALL BE PLACED 16" O.C. WHEN DEPTH OF MANHOLE EXCEEDS 5 FEET.
2. OFF SET MANHOLE OPENING AND VALVE TO ALLOW ADEQUATE ACCESS/REPAIR SPACE.

City of Asheville, NC
WATER ENGINEERING DIVISION

STANDARD 4" AND LARGER AIR RELEASE VALVE INSTALLATION

REVISIONS	
DATE	DESCRIPTION
6/2009	REVISED DETAIL FROM 6.12

STD. NO.
W.25

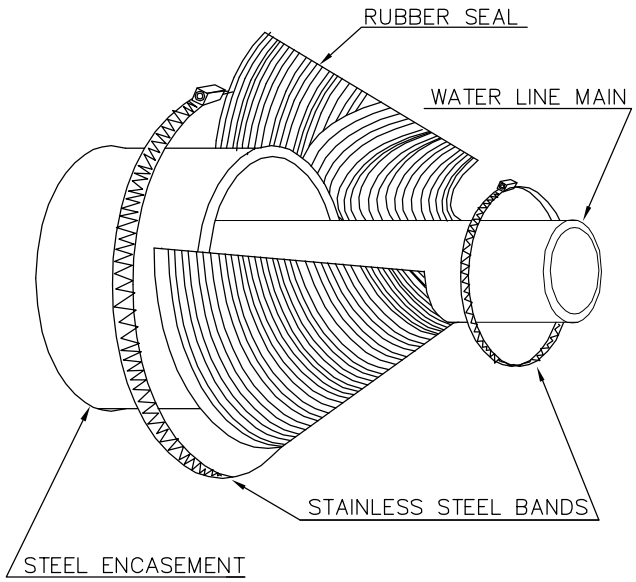

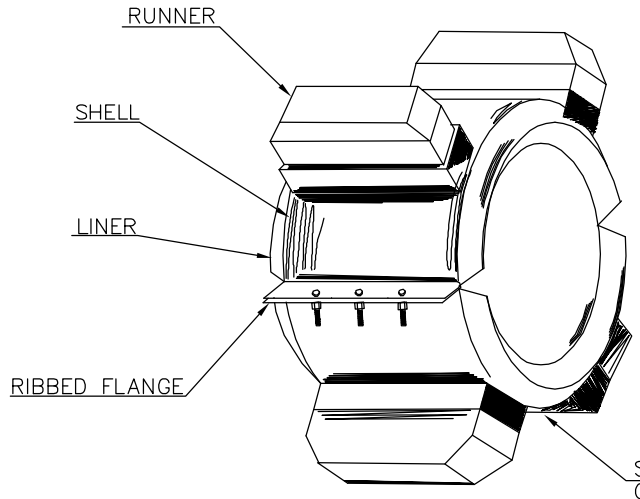

STAINLESS STEEL
CASING SPACER
2 PER JOINT OF
CARRIER PIPE
(TYPICAL)
MFG. BY CASCADE
WATERWORKS, MFG.
CO. OR APPROVED
EQUAL.

POSITIONING

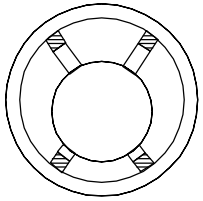

RESTRAINED: KEEPS CARRIER FROM FLOATING OR BUCKING UNDER SUDDEN PRESSURE SURGES

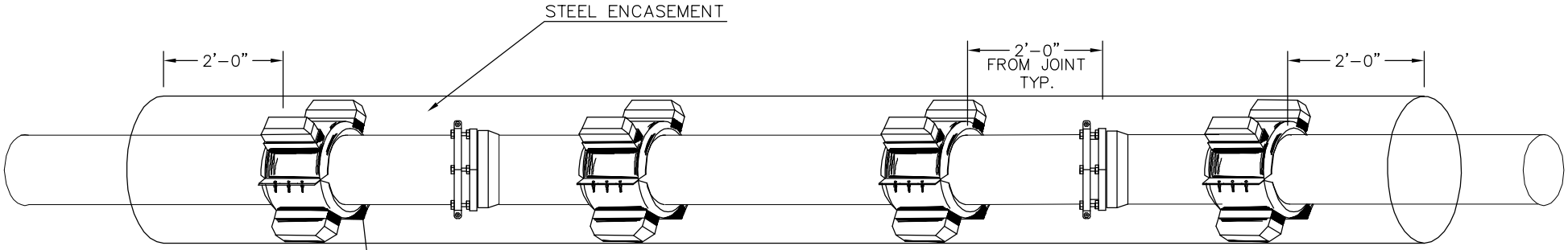

GENERAL NOTES:

1. RESTRAINED POSITIONING TO BE USED AT ALL TIMES.
2. CARRIER PIPE JOINTS SHALL BE RESTRAINED.
3. CONTRACTOR MAY USE BRICK MASONRY AND NON-SHRINK GROUT TO SEAL ENCASEMENT ENDS IN LIEU OF RUBBER SEAL. A 3/4" WEEPHOLE MUST BE PROVIDED AT LOW POINT OF CASING.

City of Asheville, NC
WATER ENGINEERING DIVISION

CARRIER PIPE IN STEEL ENCASEMENT

REVISIONS	
DATE	DESCRIPTION
6/2009	REVISED DETAIL FROM 6.08

STD. NO.
W.26

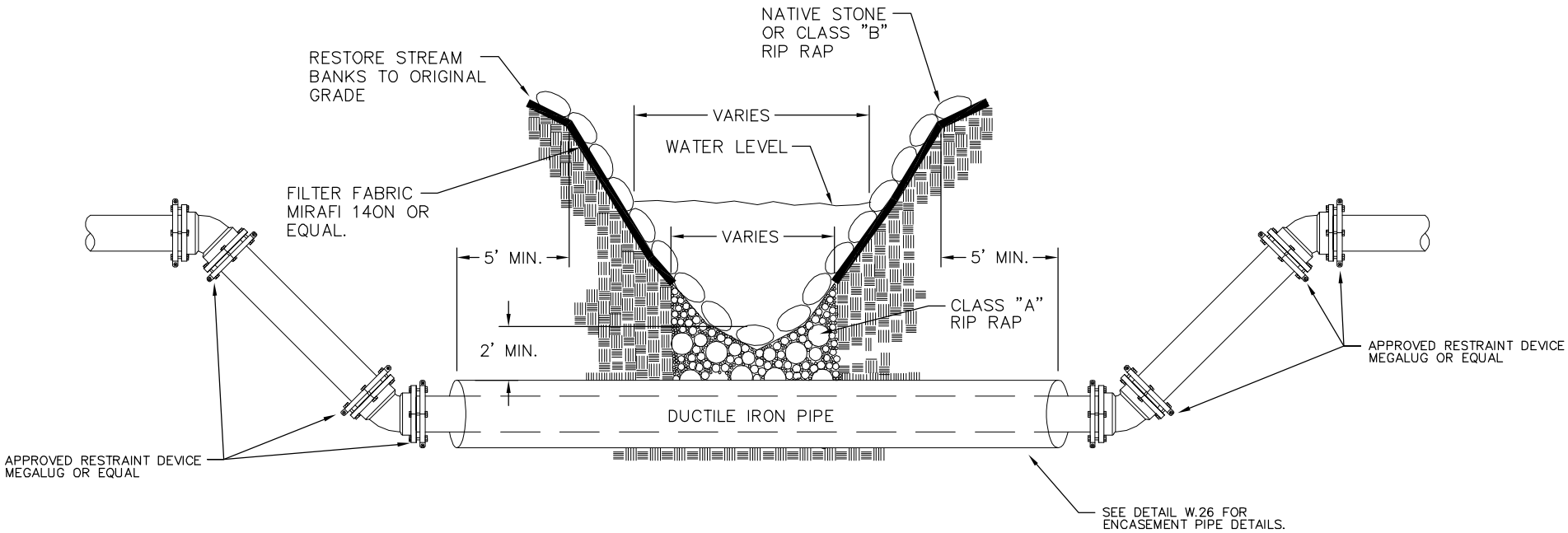

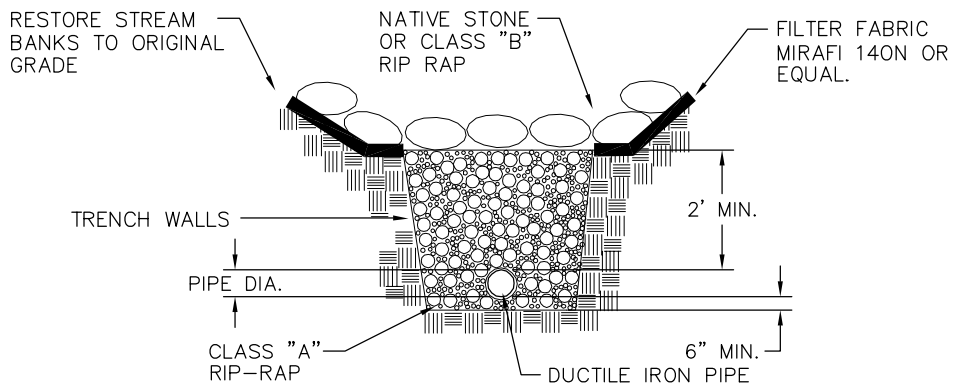

GENERAL NOTES:

1. CONTRACTOR MUST RESTRAIN AT LEAST 3 JOINTS EITHER SIDE OF THE LAST VERTICAL BEND OR AS OTHERWISE SPECIFIED BY THE ENGINEER.
2. APPROVED RESTRAINING DEVICES INCLUDE RETAINING GLANDS (MEGALUGS), FIELD LOCK GASKETS AND RESTRAINT SYSTEMS, PROVIDED BY APPROVED PIPE MANUFACTURERS.
3. ALL CREEK CROSSINGS WILL REQUIRE STEEL ENCASEMENT PIPE TO EXTEND A MINIMUM 5' VERTICALLY PAST THE VISABEL HIGH WATER MARK ON THE BANK OR PAST THE TOP EDGE OF THE BANK.

City of Asheville, NC
WATER ENGINEERING DIVISION

CREEK CROSSING BELOW CREEK BOTTOM

REVISIONS	
DATE	DESCRIPTION
6/2009	REVISED DETAIL FROM 6.23

STD. NO.
W.27

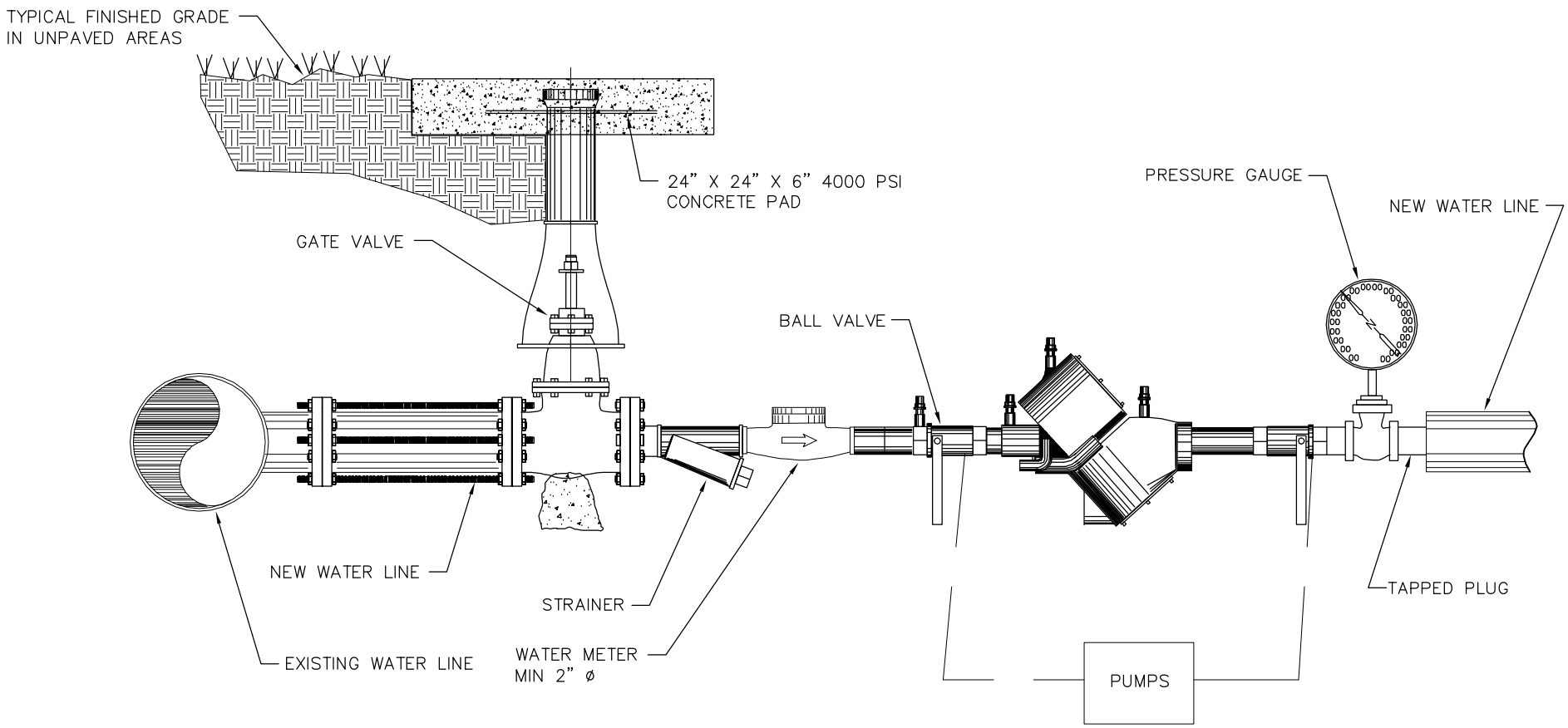

GENERAL NOTES:

1. PRIOR TO CONNECTING TO THE EXISTING WATERLINE, THE NEW WATER LINE WILL BE PRESSURE TESTED, DISINFECTED AND A CLEAR WATER SAMPLE OBTAINED.
2. ALL WATER FOR FILLING AND FLUSHING OF NEW WATER LINE WILL BE DRAWN THROUGH THE DOUBLE CHECK VALVE ASSEMBLY.
3. THE COSTS FOR PROVIDING DOUBLE CHECK VALVE ASSEMBLY AND SLEEVE NECESSARY FOR FINAL CONNECTION WILL BE INCIDENTAL TO THE WATER LINE INSTALLATION.
4. CONTRACTOR WILL BE REQUIRED TO HAVE WATER METER TESTED TO MEET ACCURACY STANDARDS OF AWWA C700, BY THE CITY OF ASHEVILLE WATER MAINTENANCE DIVISION ANNUALLY. METER MUST BEAR A CERTIFICATION TAG AT ALL TIMES.

City of Asheville, NC
WATER ENGINEERING DIVISION

NEW WATER LINE PRESSURE TEST BACKFLOW PREVENTION ASSEMBLY

REVISIONS	
DATE	DESCRIPTION
6/2009	REVISED DETAIL FROM 6.21

STD. NO.
W.28

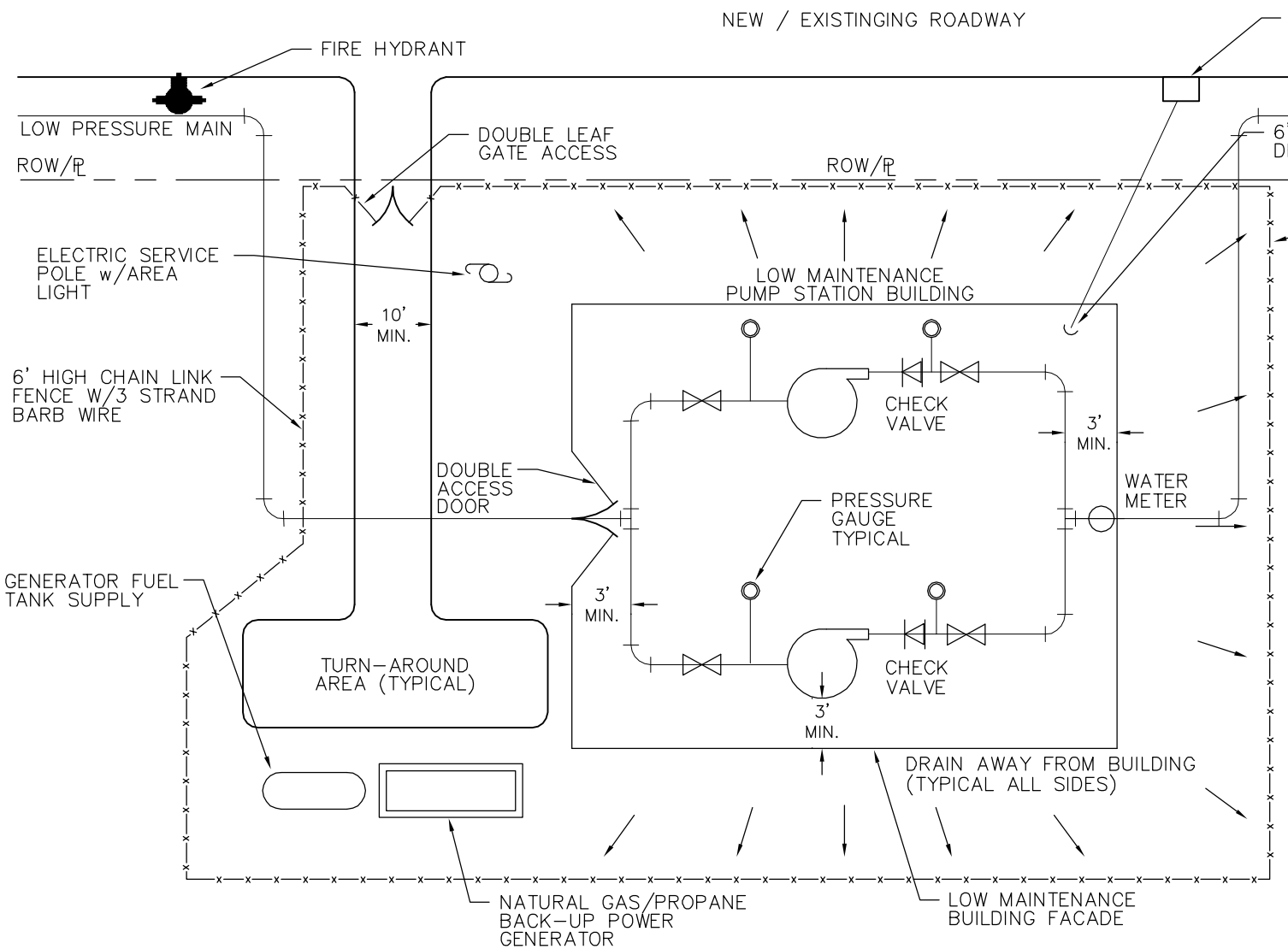

GENERAL NOTES:

1. REFER TO APPLICABLE SECTIONS OF THE DESIGN & CONSTRUCTION MANUAL FOR PUMP AND INSTRUMENTATION REQUIREMENTS.
2. WATER METER CAN BE INCORPORATED INTO THE PREPACKAGE BPS BY THE MANUFACTURER.
3. PUMP STATION BUILDING SHALL COMPLY WITH ALL BUILDING CODE REQUIREMENTS.
4. STORAGE TANK SITES SHALL HAVE THE SAME BASIC SITE LAYOUT REQUIREMENTS.
5. OVERHEAD BEAM & CRANE SHALL BE PROVIDE IF WEIGHT OF PUMP ASSEMBLY EXCEEDS 150 POUNDS.
6. GENERATOR FUEL TANK SUPPLY CAPACITY SHALL BE EQUAL TO 7 DAY SUPPLY.
7. DOOR LOCKS SHALL BE YALE Y1 KEY WITH STOREROOM FUNCTION.
8. GENERATOR IS TO BE SUPPLIED BY NATURAL GAS.

City of Asheville, NC
WATER ENGINEERING DIVISION

BASIC SITE / PIPING LAYOUT SCHEMATIC FOR BOOSTER PUMP STATION

REVISIONS	
DATE	DESCRIPTION
6/2009	REVISED DETAIL FROM 6.29

STD. NO.
W.29

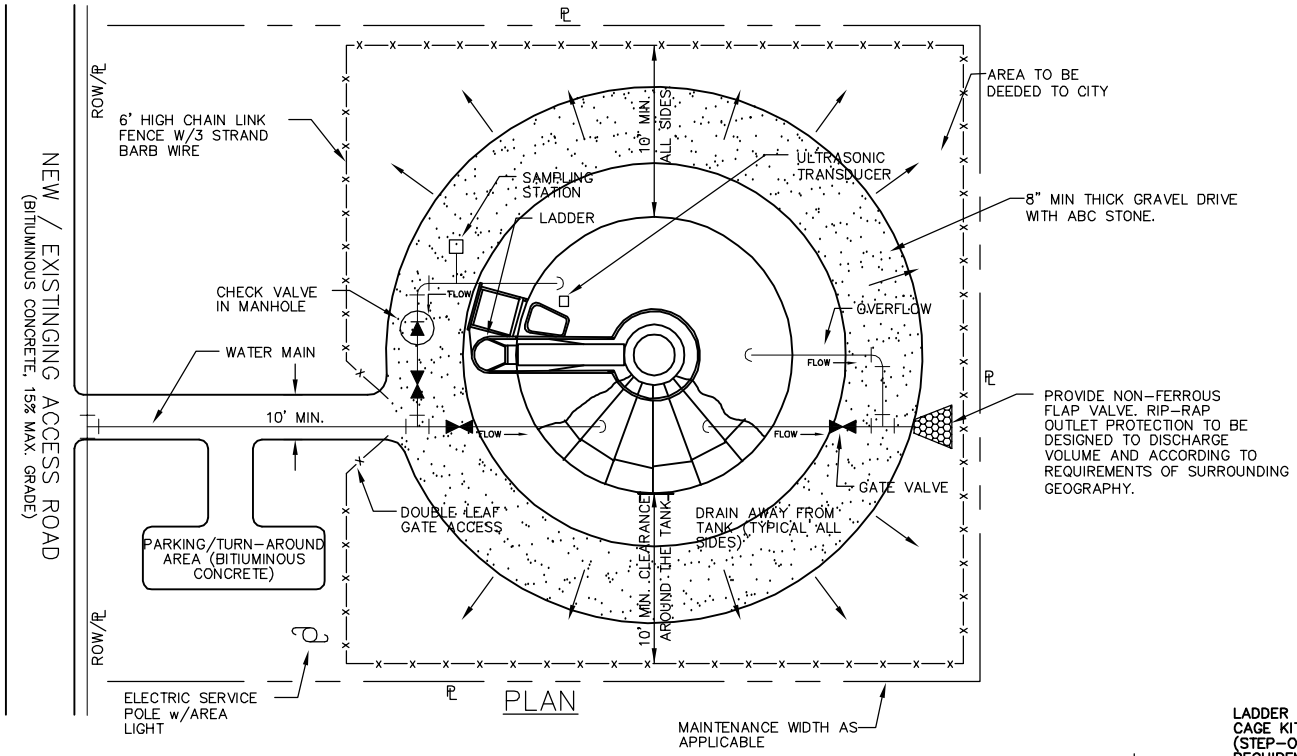

NOTES:

1. INSTALL RISER WITH FLANGED END CAP 6" BELOW GROUND SURFACE ENCLOSED WITHIN STANDARD METER BOX.
2. REFER TO WATER RESOURCES DESIGN & CONSTRUCTION MANUAL THE STANDARD SPECIFICATIONS FOR TANK ACCESSORIES AND INSTUMENTATION REQUIREMENTS.
3. TRANSDUCER MOUNTING "4" FLANGE & PIPE" LOCATION MUST BE REACHABLE FROM TANK LADDER LANDING AREA.
4. TRANSDUCER SHALL NOT BE ABOVE FILL LINE INLET AND SHALL BE INSTALLED AT LEAST 90 DEGREES FROM END OF FILL LINE.
5. MANUAL TANK LEVEL INDICATOR SHALL BE VISIBLE FROM GATE AND DRIVE.

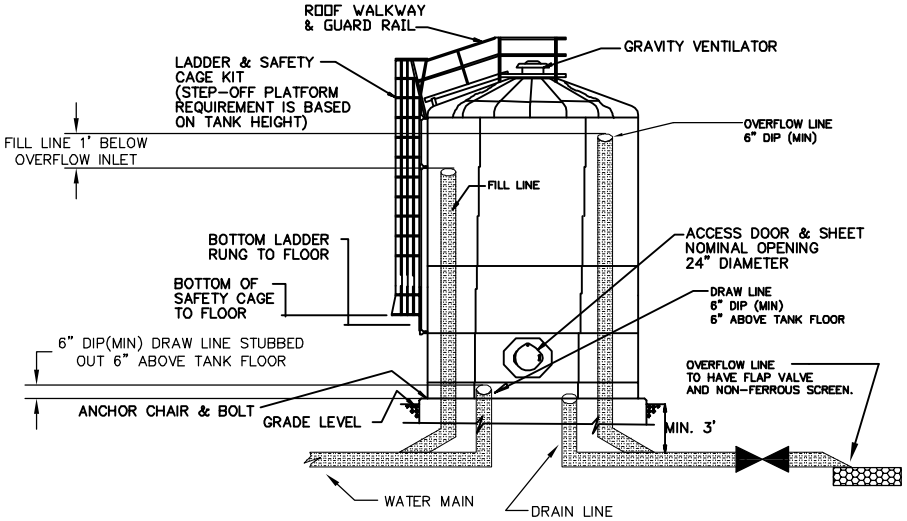

City of Asheville, NC WATER ENGINEERING DEVISION	BASIC PIPING LAYOUT SCHEMATIC & WATER STORAGE RESERVOIR	REVISIONS		STD. NO.
		DATE	DESCRIPTION	W.30
		6/2009	REVISED DETAIL FROM 6.30	

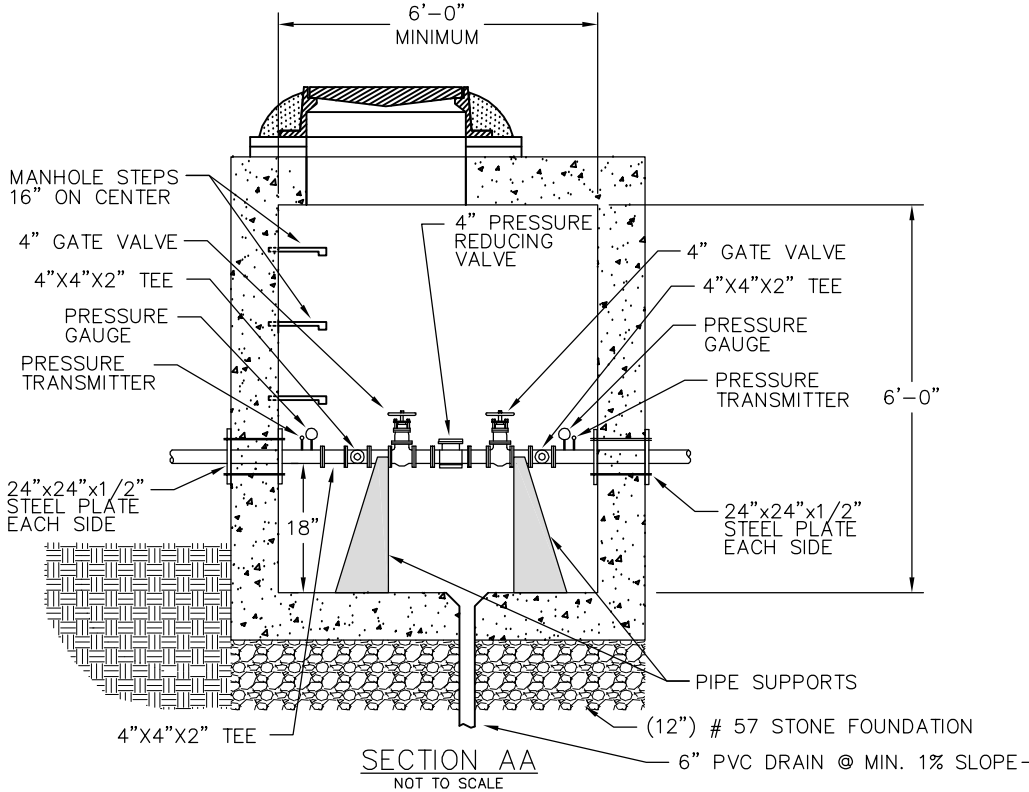

SECTION AA
NOT TO SCALE

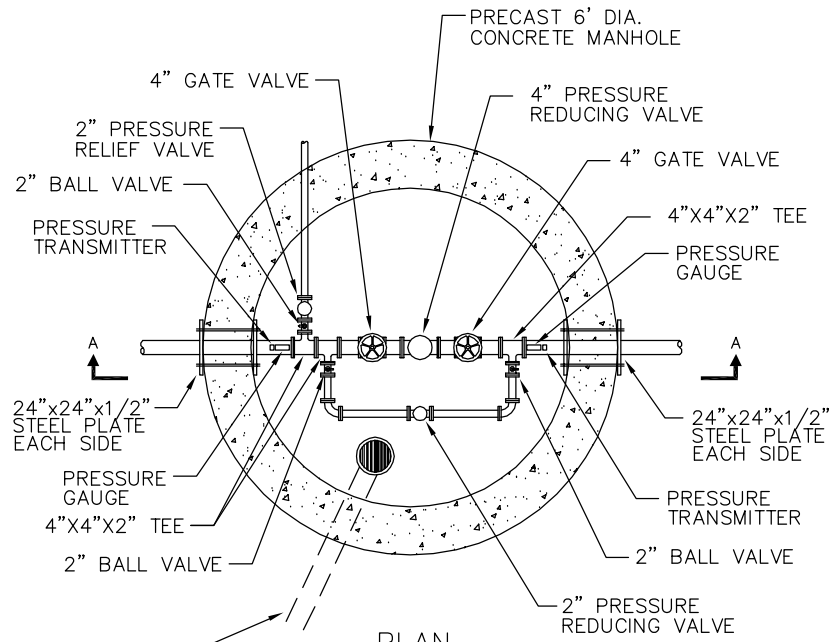

PLAN
NOT TO SCALE

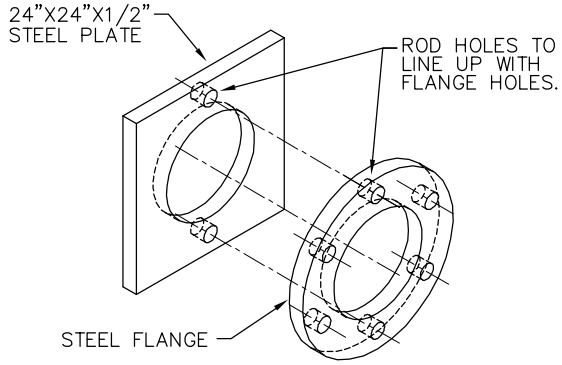

STEEL PLATE
& FLANGE
NOT TO SCALE

NOTE:

1. CONTROL VALVE INSTRUMENTATION SHALL COMPLY WITH CURRENT CITY OF ASHEVILLE SCADA REQUIREMENTS.
2. PRESSURE REDUCING VALVE SIZE MAY VARY.
3. PRESSURE TRANSMITTER TO BE ROSEMOUNT 3051S OR APPROVED EQUAL. TRANSMITTER DOES NOT HAVE TO HAVE A DIGITAL READ-OUT.
4. SPRINKLER CONTRACTOR MAY NEED TO BE CONSULTED IF INSTALLED ON A FIRELINE WITH A SPRINKLER SYSTEM.
5. IF THERE IS POWER AVAILABLE THERE WILL BE LIGHTS AND RECEPTACLES IN THE VAULT
6. COMMUNICATIONS BOX IS TO BE MOUTED OUTSIDE IN A LOCKED BOX.
7. PARKING AREA MUST BE PROVIDED.

City of Asheville, NC
WATER ENGINEERING DIVISION

MAIN LINE PRESSURE REDUCING VALVE STATION

REVISIONS	
DATE	DESCRIPTION

STD. NO.
7.31

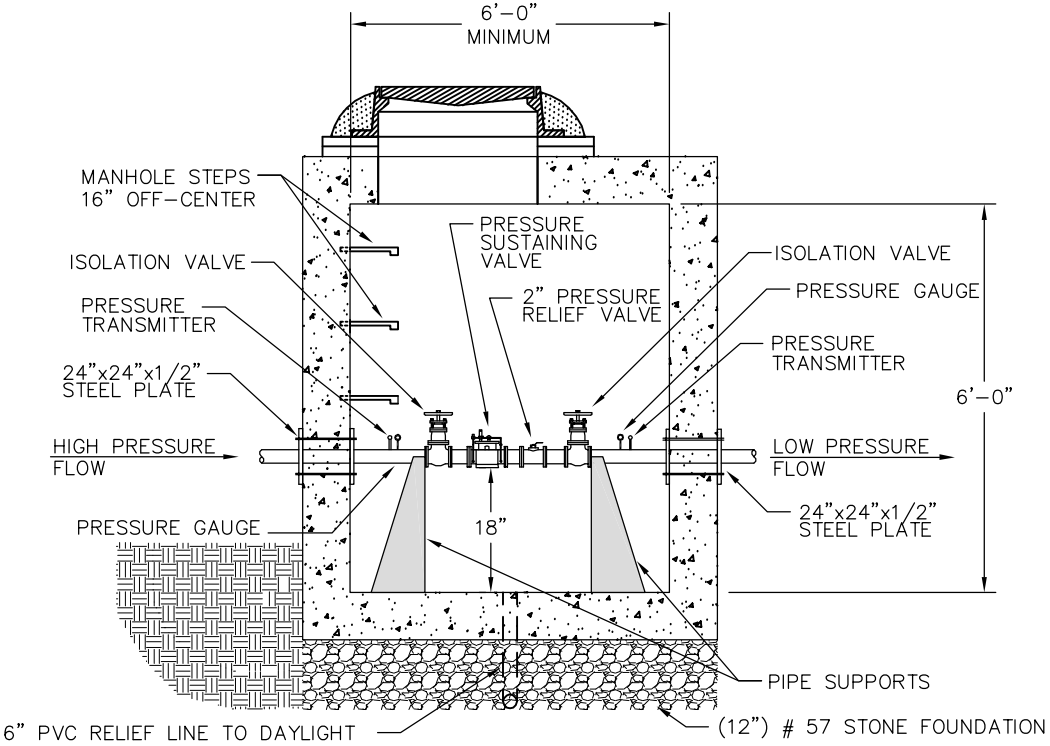

SECTION AA
NOT TO SCALE

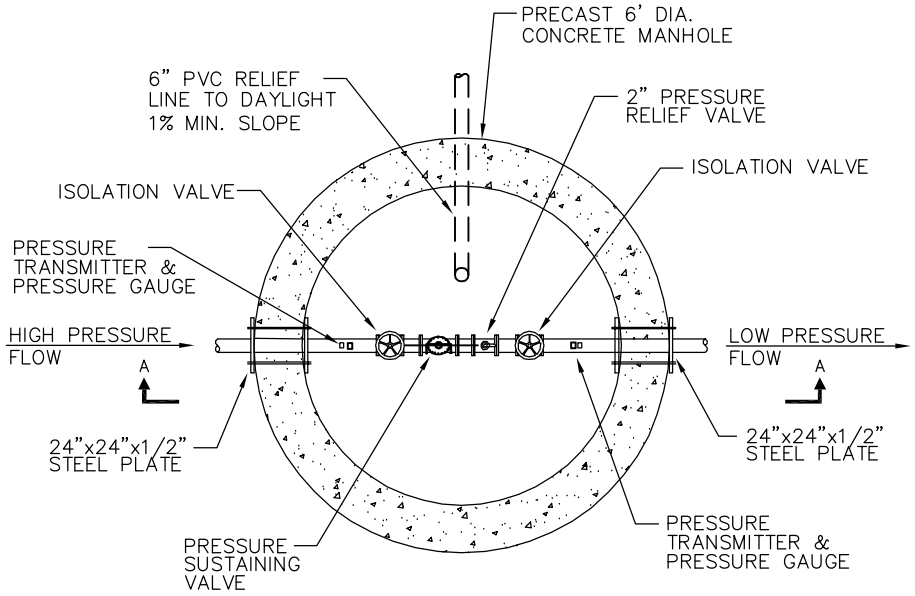

PLAN
NOT TO SCALE

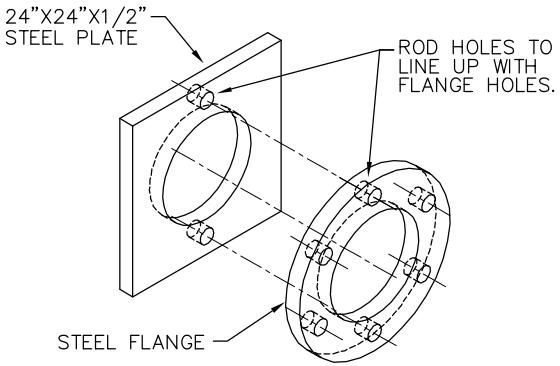

STEEL PLATE
& FLANGE
NOT TO SCALE

NOTE:

1. CONTROL VALVE INSTRUMENTATION SHALL COMPLY WITH CURRENT CITY OF ASHEVILLE SCADA REQUIREMENTS.
2. PRESSURE REDUCING VALVE SIZE MAY VARY.
3. PRESSURE TRANSMITTER TO BE ROSEMOUNT 3051S OR APPROVED EQUAL. TRANSMITTER DOES NOT HAVE TO HAVE A DIGITAL READ-OUT.
5. IF THERE IS POWER AVAILABLE THERE WILL BE LIGHTS AND RECEPTACLES IN THE VAULT
6. COMMUNICATIONS BOX IS TO BE MOUTED OUTSIDE IN A LOCKED BOX.
7. PARKING AREA MUST BE PROVIDED.

City of Asheville, NC WATER ENGINEERING DIVISION	MAIN LINE PRESSURE SUSTAINING VALVE STATION	REVISIONS DATE / DESCRIPTION	STD. NO. W.32

CAST IRON RING & COVER

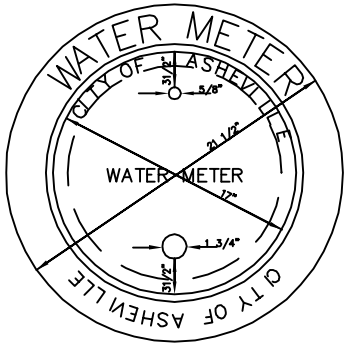

NOTE:
CAST IRON RING & COVER MIN WEIGHT 54 LBS.
"CITY OF ASHEVILLE" LOGO ON BOTH RING AND COVER TOP OF LID–ANTI–SKID GRID SURFACE.

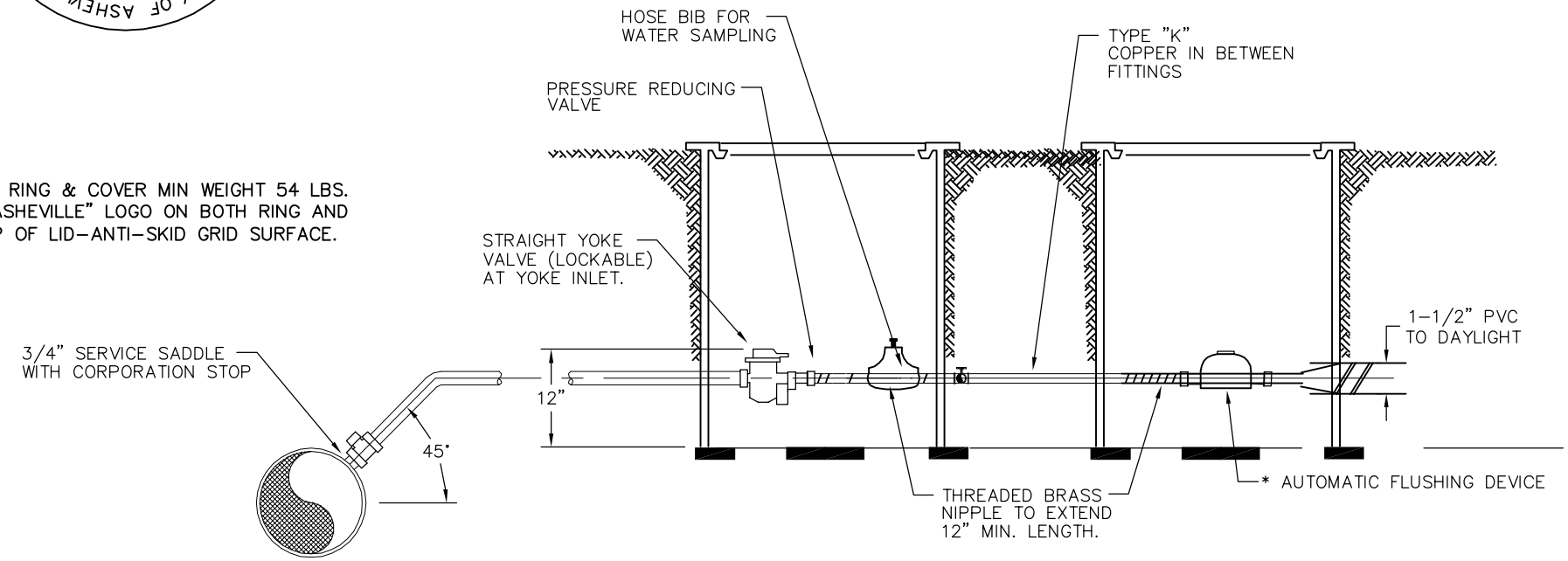

* AUTOMATIC FLUSHING DEVICE MUST BE BATTERY OPERATED AND MUST HAVE AT LEAST A 24–HOUR TIMER

City of Asheville, NC Transportation & Engineering Department	AUTOMATIC FLUSHER & TIMER	REVISIONS DATE / DESCRIPTION	STD. NO. W.33