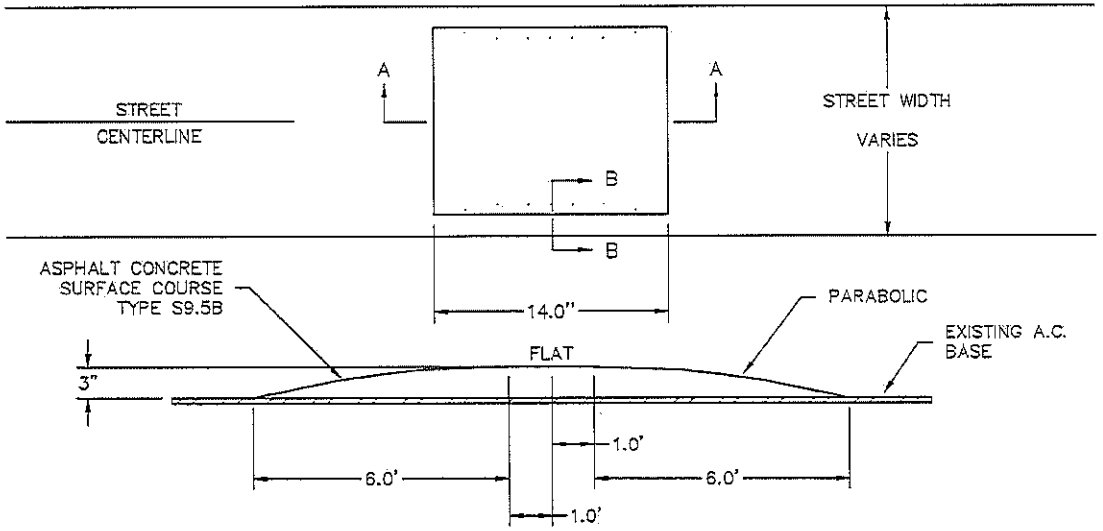

SECTION A–A

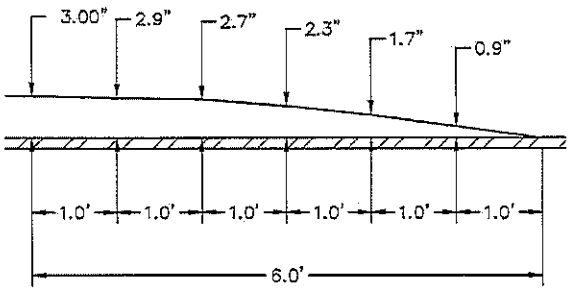

PARABOLIC SECTION

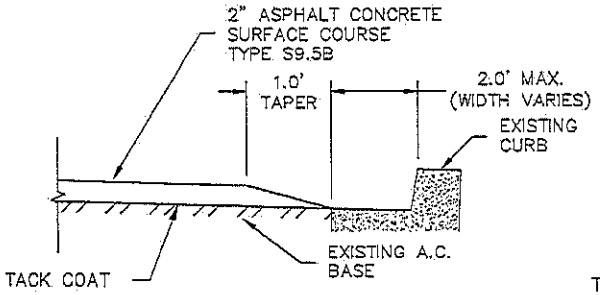

CURB DETAIL

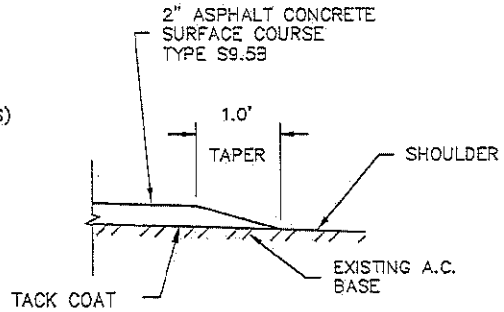

SHOULDER DETAIL FOR
STREETS WITHOUT CURB

SECTION B–B

City of Asheville, NC Standard Specifications and Details Manual	14' COLLECTOR STREET SPEED HUMP	REVISIONS DATE / DESCRIPTION	STD. NO. 3.29

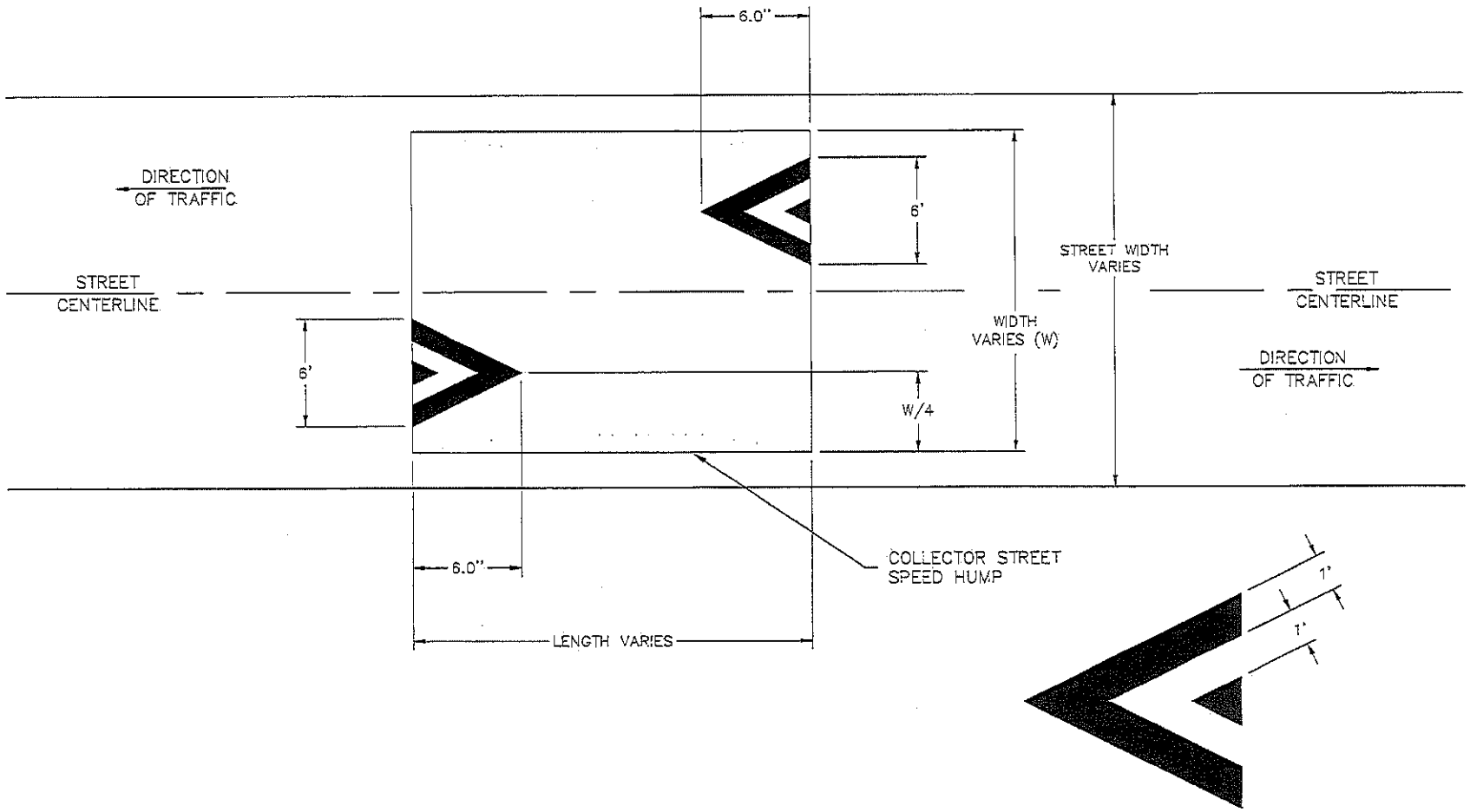

City of Asheville, NC
Engineering Services Division
of the Public Works Department

COLLECTOR STREET SPEED HUMP MARKINGS

REVISIONS	
DATE	DESCRIPTION

STD. NO.
3.31