City of Asheville

Water Resources Department

Asheville, NC

Issue Date/ Description:

MPS Project No: 06191.00

OWNER

CITY OF ASHEVILLE WATER RESOURCES DEPT
70 COURT PLAZA, CITY HALL, MEZZANINE LEVEL
ASHEVILLE, NC 28801

MR. DAVID MELTON

ARCHITECT

McMILLAN PAZDAN SMITH ARCHITECTS
34 COMMERCE STREET
ASHEVILLE, NC, 28801
828-398-5016
bcook@mcmillanpazdansmith.com

MR. BRIAN COOK

DRAWING LIST

SHEET NO	SHEET NAME	ISSUE HISTORY Rev 1
General		
G0.01	COVER SHEET	•
Architectural - Roof Package		
A4.11	ROOF PLAN	•
A8.21	DETAILS	•

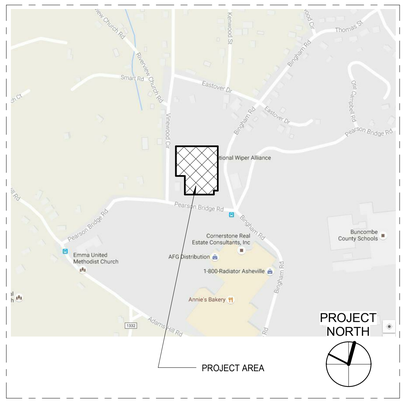

SITE MAP

NTS

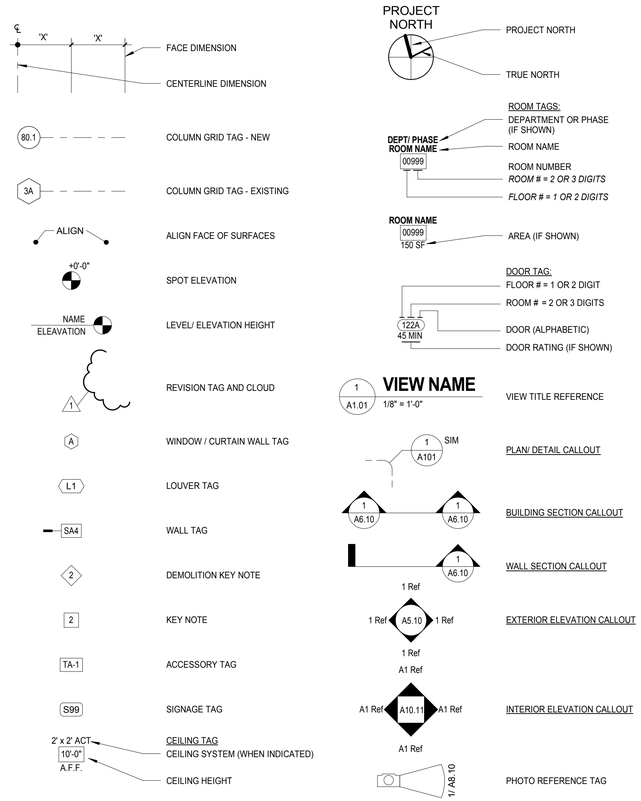

STANDARD GRAPHICS AND SYMBOLS

12" = 1'-0"

ABBREVATION NOTES:

1. ABBREVIATIONS LISTED BELOW APPLY TO THE ARCHITECTURAL DRAWINGS ONLY, REFER TO DRAWINGS BY OTHER TRADES FOR ABBREVIATIONS USED ON OTHER TRADES DRAWINGS.
2. REFER TO FINISH SCHEDULE FOR MATERIAL ABBREVIATIONS USED ON THE FINISH SCHEDULE.

ACT	ACOUSTICAL CEILING TILE	FE	FIRE EXTINGUISHER	OPHOP	POSITE HAND
ADJ	ADJACENT or ADJUSTABLE	FEC	FIRE EXTINGUISHER CABINET	OPPOP	POSITE
AFF	ABOVE FINISHED FLOOR	FIN GR	FINISH GRADE	P	PAINT
AFG	ABOVE FINISHED GRADE	FOF	FACE OF FINISH	PERF	PERFORATED
ALUM	ALUMINUM	FOM	FACE OF MASONRY	PERP	PERPENDICULAR
BATT	BATTING	FOS	FACE OF STUD	PL	PLATE
BD	BOARD	FOW	FACE OF WALL	PLAM	PLASTIC LAMINATE
BLDG	BUILDING	GA	GAUGE	PLYWD	PLYWOOD
BFF	BELOW FINISH FLOOR	GALV	GALVANIZED	PREFAB	PREFABRICATE
CF/CI	CONTRACTOR FURNISHED/CONTRACTOR INSTALLED	GC	GENERAL CONTRACTOR	PREFIN	PREFINISH
CF/OI	CONTRACTOR FURNISHED/OWNER INSTALLED	GL	GLASS	PT	PRESSURE TREATED
CJ	CONSTRUCTION JOINT\ CONTROL JOINT	GLZ	GLAZING	R	RADIUS
CL	CENTER LINE	GWB	GYPSUM WALL BOARD	REINF	REINFORCE
CLG	CEILING	HB	HOSE BIBB	RVL	REVEAL
CLR	CLEAR	HC	HOLLOW CORE	SAB	SOUND ATTENUATION BLANKETS
CMU	CONCRETE MASONRY UNIT	HCP	HANDICAPPED	SAPC	SUSPENDED ACOUSTICAL PLASTER CEILING
CO	CLEANOUT	HCWD	HOLLOW CORE WOOD DOOR	SATC	SUSPENDED ACOUSTICAL TILE CEILING
COL	COLUMN	HDW	HARDWARE	SIM	SIMILAR
CONC	CONCRETE	HDWD	HARDWOOD	SPEC	SPECIFICATION(S)
COORD	COORDINATE	HM	HOLLOW METAL	STL	STEEL
CORR	CORRIDOR	INSUL	INSULATION	STOR	STORAGE
CPT	CARPET	KD	KNOCKED DOWN	TEMP	TEMPORARY
DEMO	DEMOLITION	KIT	KITCHEN	TO	TOP OF
DIA	DIAMETER	KPL	KICKPLATE	TOM	TOP OF MASONRY
DRWGS	DRAWINGS	LB	POUND(S)	TOP	TOP OF PARAPET
DS	DOWNSPOUT	LF	LINEAR FEET (FOOT)	TOS	TOP OF SLAB\ TOP OF STEEL
DSP	DRY STANDPIPE	MECH	MECHANICAL	TOW	TOP OF WALL
EIFS	EXTERIOR INSULATION AND FINISH SYSTEM	MEZZ	MEZZANINE	TYP	TYPICAL
EJ	EXPANSION JOINT	MIN	MINIMUM	UNO	UNLESS NOTED OTHERWISE
ELEC	ELECTRIC	MISC	MISCELLANEOUS	VERT	VERTICAL
ELEV	ELEVATOR OR ELEVATION	MO	MASONRY OPENING	VIF	VERIFY IN FIELD
EOS	EDGE OF SLAB	MTL	METAL	VJ	V JOINT
EQ	EQUAL	NA	NOT APPLICABLE	VNR VENEER	
EQUIP	EQUIPMENT	NIC	NOT IN CONTRACT	W/	WITH
EWH	ELECTRIC WATER HEATER	NLB	NONLOADBEARING	W/O	WITHOUT
EXIST	EXISTING	NTP	NOTICE TO PROCEED	WD	WOOD
FD	FLOOR DRAIN	OC	ON CENTER	WH	WATER HEATER
FDC	FIRE DEPARTMENT CONNECTION	OF/CI	OWNER FURNISHED/CONTRACTOR INSTALLED	WSCT	WAINSCOT
		OF/OI	OWNER FURNISHED/OWNER INSTALLED	WWM	WELDED WIRE MESH

ABBREVIATION LIST

12" = 1'-0"

10/20/2016 3:37:20 PM C:\Users\brian.cook\Documents\Revit\06191.00 Water Resources Customer Service Center R15_brian.cook.rvt
ALL DRAWINGS, SPECIFICATIONS AND CONSTRUCTIONS THEREOF FURNISHED BY MCMILLAN PAZDAN SMITH ARCHITECTURE ARE AND SHALL REMAIN THE PROPERTY OF MCMILLAN PAZDAN SMITH ARCHITECTURE. THESE MATERIALS ARE TO BE USED ONLY WITH RESPECT TO THIS PROJECT AND NOT TO BE USED WITH ANY OTHER PROJECT, WITH THE EXCEPTION OF ONE CONTRACT SET FOR EACH PARTY TO THE CONTRACT. SUCH DOCUMENTS ARE TO BE RETURNED OR SUITABLY ACCOUNTED FOR TO MCMILLAN PAZDAN SMITH ARCHITECTURE UPON COMPLETION OF THE PROJECT. SUBMISSION OR DISTRIBUTION TO MEET OFFICIAL REGULATORY REQUIREMENTS OR FOR OTHER PURPOSES IN CONNECTION WITH THE PROJECT IS NOT TO BE CONSTRUED AS PUBLICATION IN DEROGATION OF MCMILLAN PAZDAN SMITH'S COMMON LAW COPYRIGHT OR OTHER RESERVED RIGHTS. COPYRIGHT 2011 MCMILLAN PAZDAN SMITH - ALL RIGHTS RESERVED

mcmillan | pazdan | smith
ARCHITECTURE
asheville atlanta charleston charlotte greenville spartanburg
34 commerce street asheville, nc 28801 o: 828 398 5016
www.mcmillanpazdansmith.com

CONSULTANT LOGO

SEAL

McMILLAN PAZDAN SMITH, P.A. ARCHITECTURE & INTERIOR DESIGN CERTIFICATE OF AUTHORIZATION NORTH CAROLINA CERT. NO. 52413 GREENVILLE, SOUTH CAROLINA

CARLETON RAY COLLINS REGISTERED ARCHITECT 5686 NORTH CAROLINA ASHEVILLE, N.C.

10/14/16

City of Asheville

Water Resources Department

200 BINGHAM ROAD ASHEVILLE, NC 28806

SHEET ISSUE:

NO.	DATE	DESCRIPTION	BY
	10/14/16	BID SET	

PRINCIPAL IN CHARGE: CC
PROJECT ARCHITECT: BC
DRAWN BY: JH

SHEET TITLE:
COVER SHEET

SHEET NO. G0.01

PROJ. NO. 06191.00

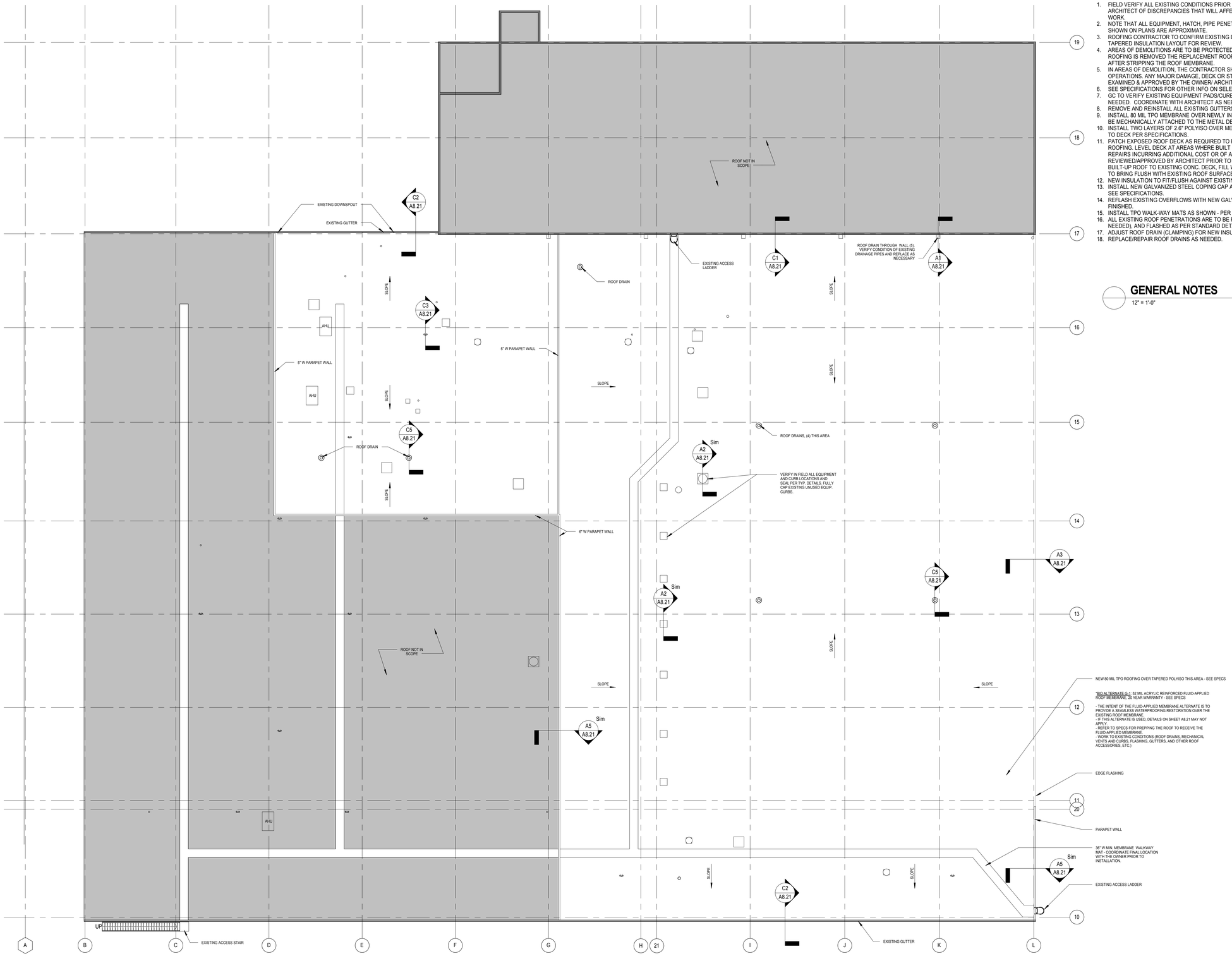

1. FIELD VERIFY ALL EXISTING CONDITIONS PRIOR TO CONSTRUCTION AND NOTIFY THE ARCHITECT OF DISCREPANCIES THAT WILL AFFECT THE SCOPE OR EXECUTION OF THE WORK.
2. NOTE THAT ALL EQUIPMENT, HATCH, PIPE PENETRATIONS, AND ROOF DRAINS AS SHOWN ON PLANS ARE APPROXIMATE.
3. ROOFING CONTRACTOR TO CONFIRM EXISTING DRAINAGE PATTERN AND SUBMIT A TAPERED INSULATION LAYOUT FOR REVIEW.
4. AREAS OF DEMOLITIONS ARE TO BE PROTECTED FROM THE WEATHER. WHERE ROOFING IS REMOVED THE REPLACEMENT ROOF SHALL BE INSTALLED IMMEDIATELY AFTER STRIPPING THE ROOF MEMBRANE.
5. IN AREAS OF DEMOLITION, THE CONTRACTOR SHALL CONDUCT MINOR PATCHING OPERATIONS. ANY MAJOR DAMAGE, DECK OR STRUCTURAL REPAIRS SHALL BE EXAMINED & APPROVED BY THE OWNER/ ARCHITECT PRIOR TO PROCEEDING.
6. SEE SPECIFICATIONS FOR OTHER INFO ON SELECTED DEMOLITION
7. GC TO VERIFY EXISTING EQUIPMENT PADS/CURBS - ASSESS, REPAIR OR REPLACE AS NEEDED. COORDINATE WITH ARCHITECT AS NEEDED.
8. REMOVE AND REINSTALL ALL EXISTING GUTTERS.
9. INSTALL 80 MIL TPO MEMBRANE OVER NEWLY INSTALLED INSULATION. MEMBRANE TO BE MECHANICALLY ATTACHED TO THE METAL DECKING PER SPECIFICATIONS
10. INSTALL TWO LAYERS OF 2.6" POLYISO OVER METAL DECK. MECHANICALLY FASTEN TO DECK PER SPECIFICATIONS.
11. PATCH EXPOSED ROOF DECK AS REQUIRED TO PROVIDE SOUND SUBSTRATE FOR NEW ROOFING. LEVEL DECK AT AREAS WHERE BUILT UP ROOF WAS REMOVED. ANY REPAIRS INCURRING ADDITIONAL COST OR OF A STRUCTURAL NATURE MUST BE REVIEWED/APPROVED BY ARCHITECT PRIOR TO PROCEEDING. REMOVE EXISTING BUILT-UP ROOF TO EXISTING CONC. DECK, FILL WITH POLYISO INSULATION AS REQ'D TO BRING FLUSH WITH EXISTING ROOF SURFACE.
12. NEW INSULATION TO FIT/FLUSH AGAINST EXISTING CANTS.
13. INSTALL NEW GALVANIZED STEEL COPING CAP AT PARAPET WALLS WHERE SHOWN. SEE SPECIFICATIONS.
14. REFLASH EXISTING OVERFLOWS WITH NEW GALV. STEEL FLASHING - PREFORMED & FINISHED.
15. INSTALL TPO WALK-WAY MATS AS SHOWN - PER ROOF SYSTEM SPECIFICATIONS.
16. ALL EXISTING ROOF PENETRATIONS ARE TO BE FIELD VERIFIED, CLEANED (REPAIR AS NEEDED), AND FLASHED AS PER STANDARD DETAILS.
17. ADJUST ROOF DRAIN (CLAMPING) FOR NEW INSULATION ROOF INSTALLATION.
18. REPLACE/REPAIR ROOF DRAINS AS NEEDED.

GENERAL NOTES

12" = 1'-0"

ROOF PLAN

1 / A4.11 1/16" = 1'-0"

ALL DRAWINGS, SPECIFICATIONS AND COPIES THEREOF FURNISHED BY MCMILLAN PAZDAN SMITH ARCHITECTURE ARE AND SHALL REMAIN THE PROPERTY OF MCMILLAN PAZDAN SMITH ARCHITECTURE. THESE MATERIALS ARE TO BE USED ONLY WITH RESPECT TO THIS PROJECT AND NOT TO BE USED WITH ANY OTHER PROJECT, WITH THE EXCEPTION OF ONE CONTRACT SET FOR EACH PARTY TO THE CONTRACT. SUCH DOCUMENTS ARE TO BE RETURNED OR SUITABLY ACCOUNTED FOR TO MCMILLAN PAZDAN SMITH ARCHITECTURE UPON COMPLETION OF THE PROJECT. SUBMISSION OR DISTRIBUTION TO MEET OFFICIAL REGULATORY REQUIREMENTS OR FOR OTHER PURPOSES IN CONNECTION WITH THE PROJECT IS NOT TO BE CONSTRUED AS A PUBLICATION IN DEROGATION OF MCMILLAN PAZDAN SMITH'S COMMON LAW COPYRIGHT OR OTHER RESERVED RIGHTS. COPYRIGHT 2011 MCMILLAN PAZDAN SMITH - ALL RIGHTS RESERVED

10/20/2016 5:57:18 PM C:\Users\cc\Desktop\Revit 2015\06191 Water Resources Customer Service Center R15_cc\cc\Revit\cc\mpsarchitecture.com

mcmillan | pazdan | smith
ARCHITECTURE
asheville atlanta charleston charlotte greenville spartanburg
34 commerce street asheville, nc 28801 o: 828 398 5016
www.mcmillanpazdansmith.com

CONSULTANT LOGO

SEAL

MCMILLAN PAZDAN SMITH, P.L.L.C. REGISTERED ARCHITECTURAL CORPORATION CERT. NO. 52413 GREENVILLE, SOUTH CAROLINA

CARLETON RAY COLLINS REGISTERED ARCHITECT 5686 NORTH CAROLINA ASHEVILLE, N.C.

10/14/16

City of Asheville

Water Resources Department

200 BINGHAM ROAD ASHEVILLE, NC 28806

SHEET ISSUE:

NO.	DATE	DESCRIPTION	BY
	10/14/16	BID SET	

PRINCIPAL IN CHARGE: CC
PROJECT ARCHITECT: BC
DRAWN BY: JH

SHEET TITLE:
ROOF PLAN

SHEET NO. A4.11

PROJ. NO. 06191.00

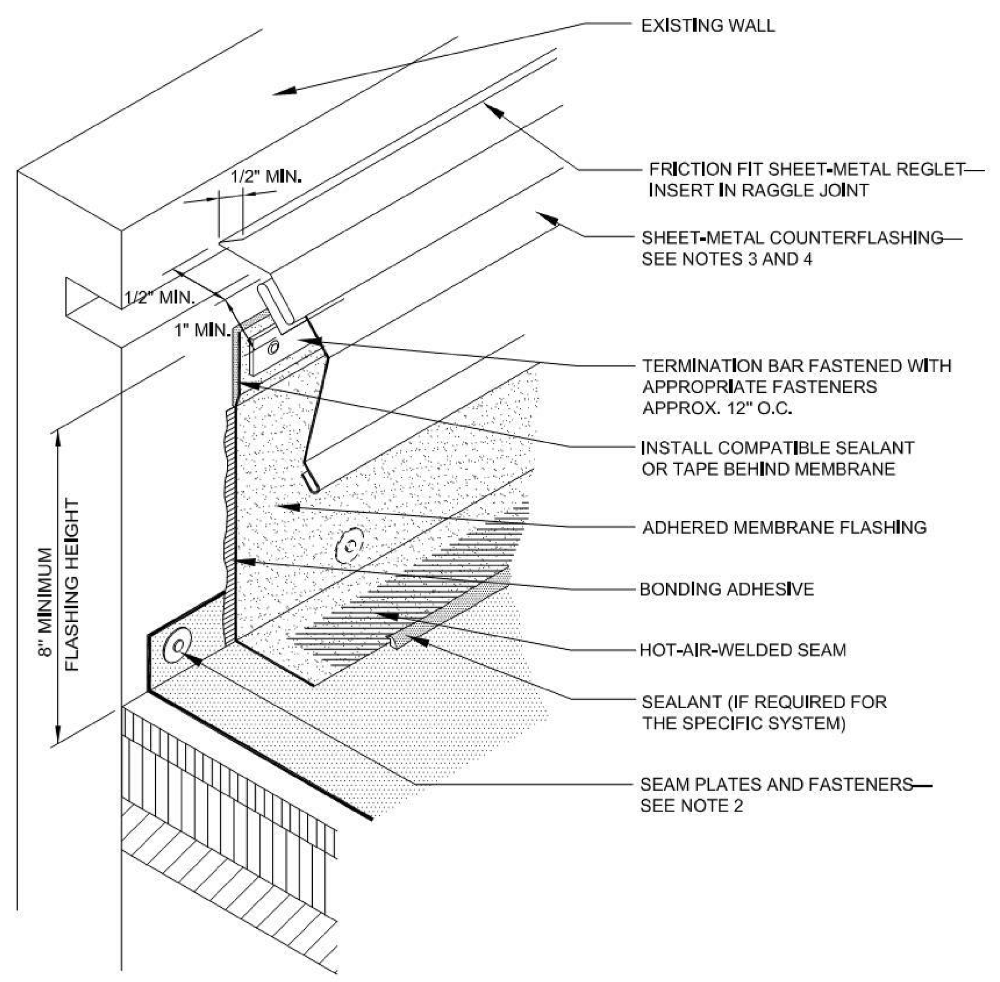

NOTES:

1. THIS DETAIL DOES NOT ALLOW FOR DIFFERENTIAL MOVEMENT BETWEEN THE DECK AND WALL.
2. REFER TO THE INTRODUCTION OF THE CONSTRUCTION DETAILS CHAPTER FOR ALTERNATIVE BASE SECUREMENT OPTIONS.
3. REFER TO THE ARCHITECTURAL METAL FLASHING SECTION OF THE NRCA ROOFING MANUAL: ARCHITECTURAL METAL FLASHING, CONDENSATION AND AIR LEAKAGE CONTROL, AND REROOFING FOR DESIGN, JOINERY AND SECUREMENT OPTIONS FOR COUNTERFLASHINGS.
4. REFER TO THE INTRODUCTION OF THE CONSTRUCTION DETAILS CHAPTER FOR ADDITIONAL INFORMATION.

BASE FLASHING WITH INSERT REGLET RECEIVER AND COUNTERFLASHING

2015 *NOT DRAWN TO SCALE* **TP-6 + CF-3**

C1 / A8.21

TYP SIDE WALL TERMINATION DETAIL

12" = 1'-0"

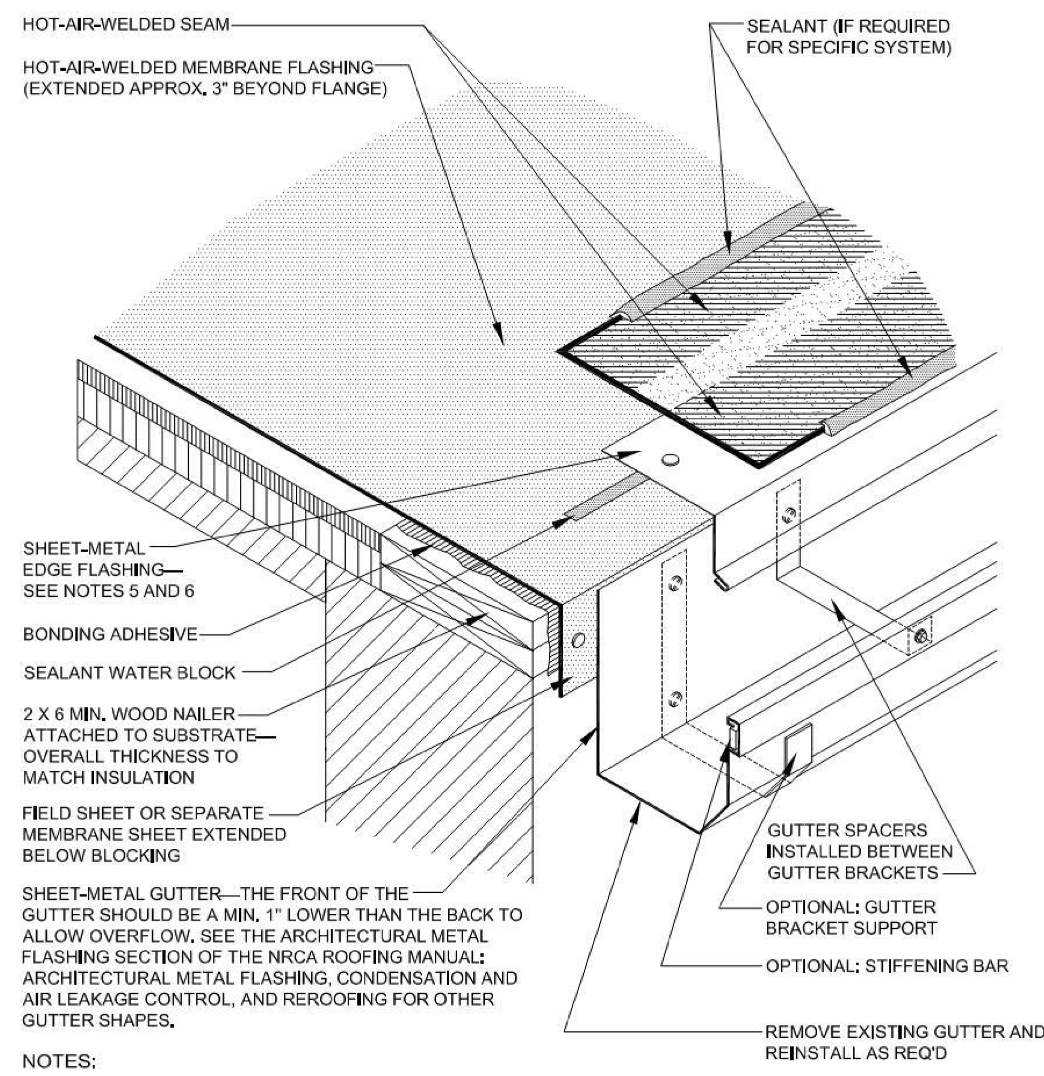

NOTES:

1. IN CLIMATES WHERE THE WINTER TEMPERATURE REMAINS BELOW FREEZING FOR EXTENDED PERIODS OF TIME, NRCA SUGGESTS INTERIOR DRAINS TO DRAIN THE ROOF.
2. GUTTER BRACKETS ARE RECOMMENDED TO BE AT LEAST ONE GAUGE HEAVIER THAN GUTTER STOCK.
3. ON BALLASTED SYSTEMS, A DRAINAGE BAR TO RETAIN BALLAST IS REQUIRED.
4. REFER TO MANUFACTURERS' SPECIFICATIONS FOR SPECIFIC REQUIREMENTS FOR BASE MEMBRANE ATTACHMENT AND PLACEMENT. MECHANICALLY ATTACHED SYSTEMS GENERALLY REQUIRE SPECIFIC ATTACHMENT REQUIREMENTS FOR PERIMETER LOCATIONS.
5. REFER TO THE ARCHITECTURAL METAL FLASHING SECTION OF THE NRCA ROOFING MANUAL: ARCHITECTURAL METAL FLASHING, CONDENSATION AND AIR LEAKAGE CONTROL, AND REROOFING FOR DESIGN, JOINERY AND SECUREMENT OPTIONS FOR PERIMETER EDGE METAL.
6. REFER TO THE INTRODUCTION OF THE CONSTRUCTION DETAILS CHAPTER FOR ADDITIONAL INFORMATION.

GUTTER WITH MEMBRANE-COATED PERIMETER EDGE METAL

2015 *NOT DRAWN TO SCALE* **TP-30**

C2 / A8.21

TYP. GUTTER DETAIL

12" = 1'-0"

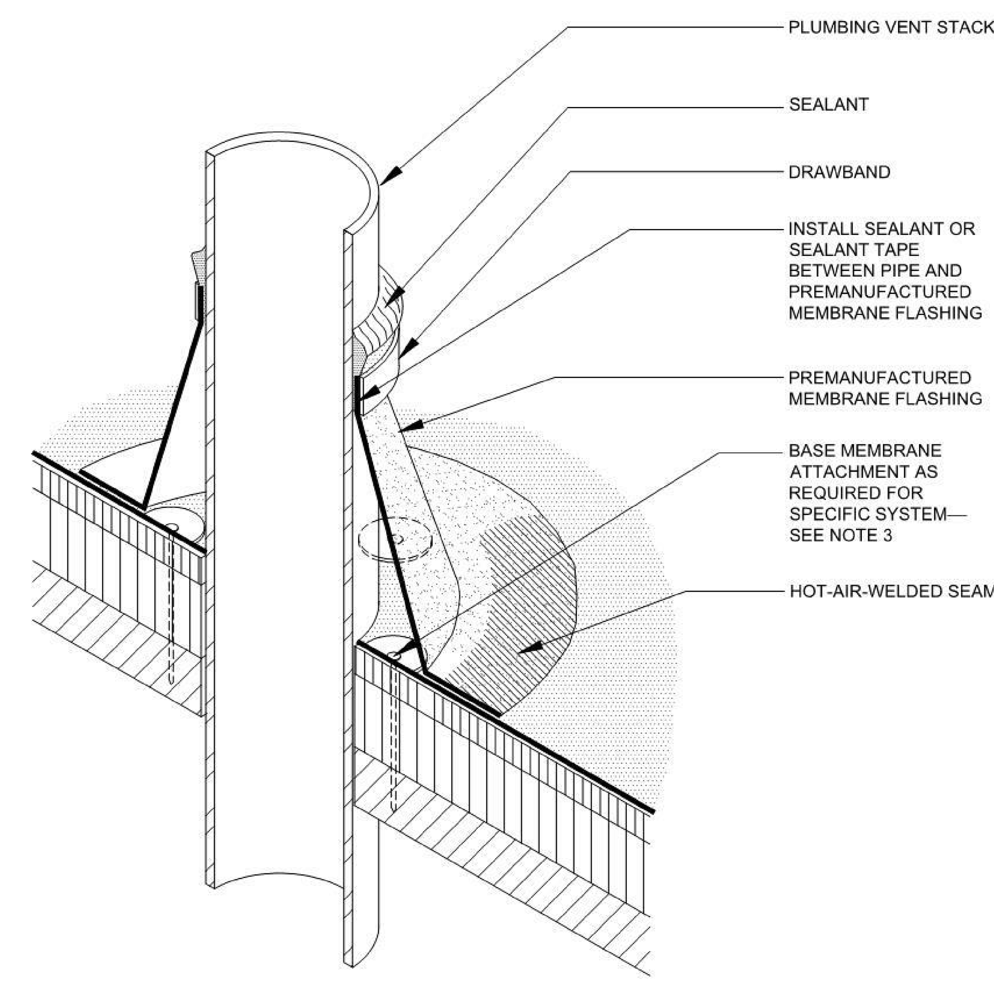

NOTES:

1. VENT STACKS AND OTHER PIPES SHOULD HAVE A MINIMUM OF 12 INCHES OF CLEARANCE ON ALL SIDES FROM WALLS, CURBS AND OTHER PROJECTIONS TO FACILITATE PROPER FLASHING. SEE THE INTRODUCTION TO THE CONSTRUCTION DETAILS FOR ADDITIONAL INFORMATION.
2. NRCA RECOMMENDS FLASHINGS BE 8 INCHES HIGH; HOWEVER, NRCA IS AWARE PREMANUFACTURED BOOT FLASHINGS GENERALLY WILL NOT MEET THE HEIGHT REQUIREMENT.
3. REFER TO MANUFACTURERS' SPECIFICATIONS FOR SPECIFIC REQUIREMENTS FOR BASE MEMBRANE ATTACHMENT AND PLACEMENT. MECHANICALLY ATTACHED SYSTEMS GENERALLY HAVE SPECIFIC ATTACHMENT REQUIREMENTS FOR PENETRATION LOCATIONS.
4. REFER TO THE INTRODUCTION OF THE CONSTRUCTION DETAILS CHAPTER FOR ADDITIONAL INFORMATION.

PLUMBING VENT [PREMANUFACTURED BOOT]

2015 *NOT DRAWN TO SCALE* **TP-20**

C3 / A8.21

TYP. PIPE PENETRATION DETAIL

12" = 1'-0"

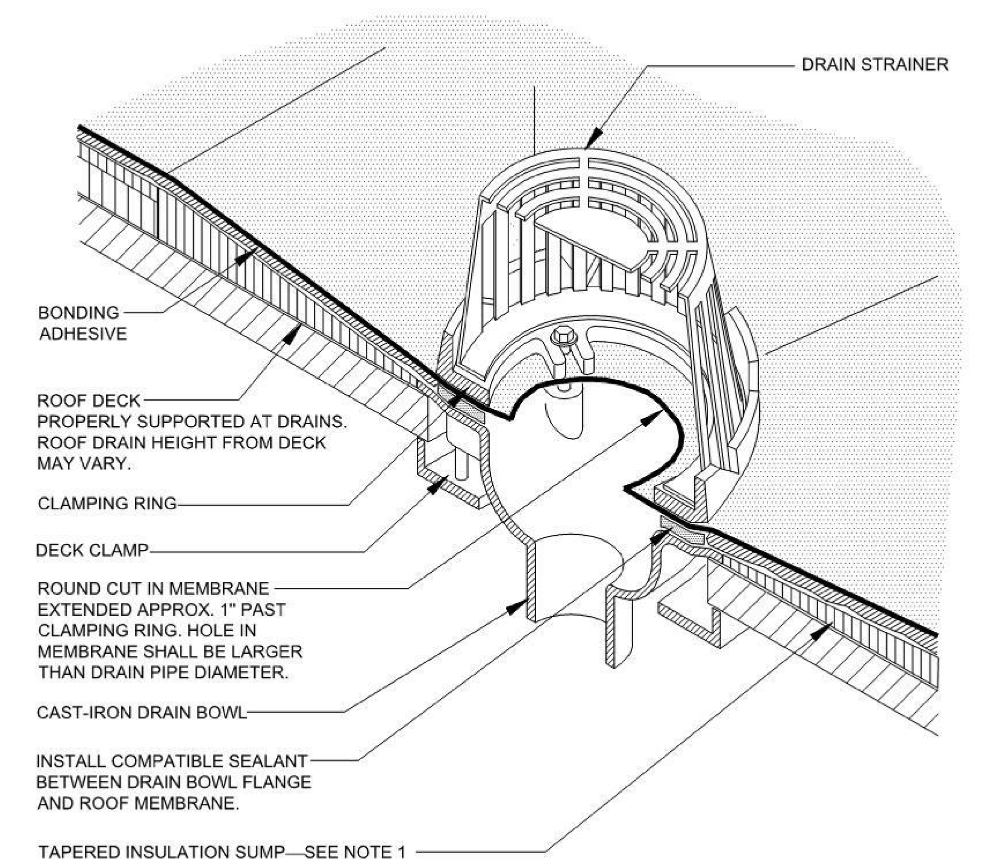

NOTES:

1. THE USE OF A METAL DECK SUMP PAN IS NOT RECOMMENDED. HOWEVER, DRAIN RECEIVER/BEARING PLATES ARE APPLICABLE WITH SOME PROJECTS.
2. THE DESIGNER SHOULD CONSIDER INSULATING THE DRAIN COMPONENTS BELOW THE DECK TO PREVENT POTENTIAL CONDENSATION.
3. MEMBRANE SEAMS SHOULD NOT INTERSECT DRAIN CLAMPING RING. SEAMS THAT FALL WITHIN DRAIN SUMP SHOULD BE STRIPPED IN.
4. REFER TO THE INTRODUCTION OF THE CONSTRUCTION DETAILS CHAPTER FOR ADDITIONAL INFORMATION.

ROOF DRAIN
(ADHERED MEMBRANE ROOF SYSTEMS)

2015 *NOT DRAWN TO SCALE* **TP-26**

C5 / A8.21

TYP. ROOF DRAIN DETAIL

12" = 1'-0"

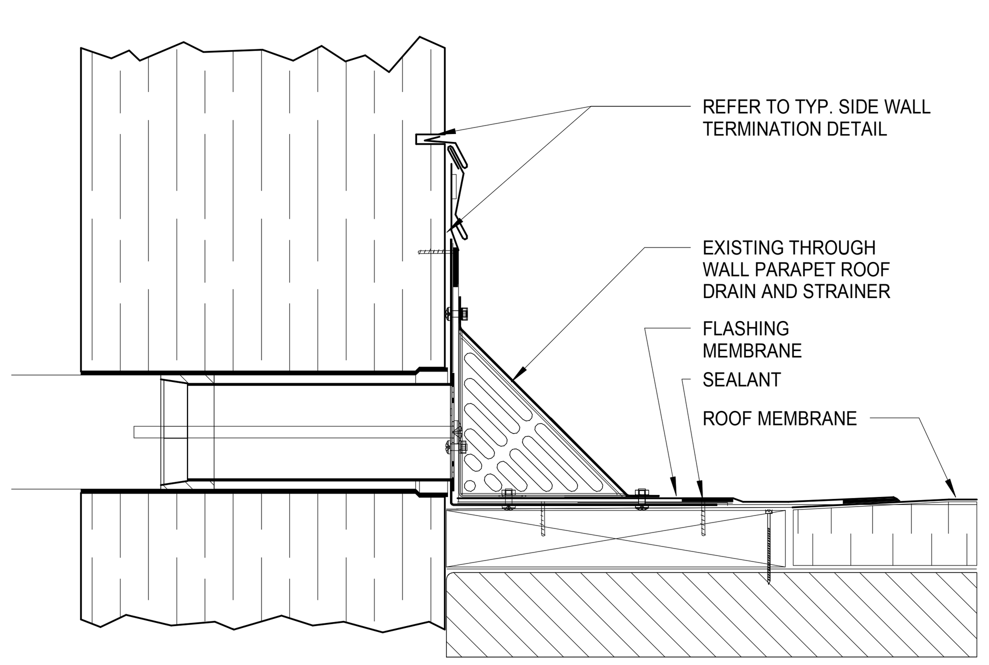

A1 / A8.21

THROUGH WALL PARAPET ROOF DRAIN

1 1/2" = 1'-0"

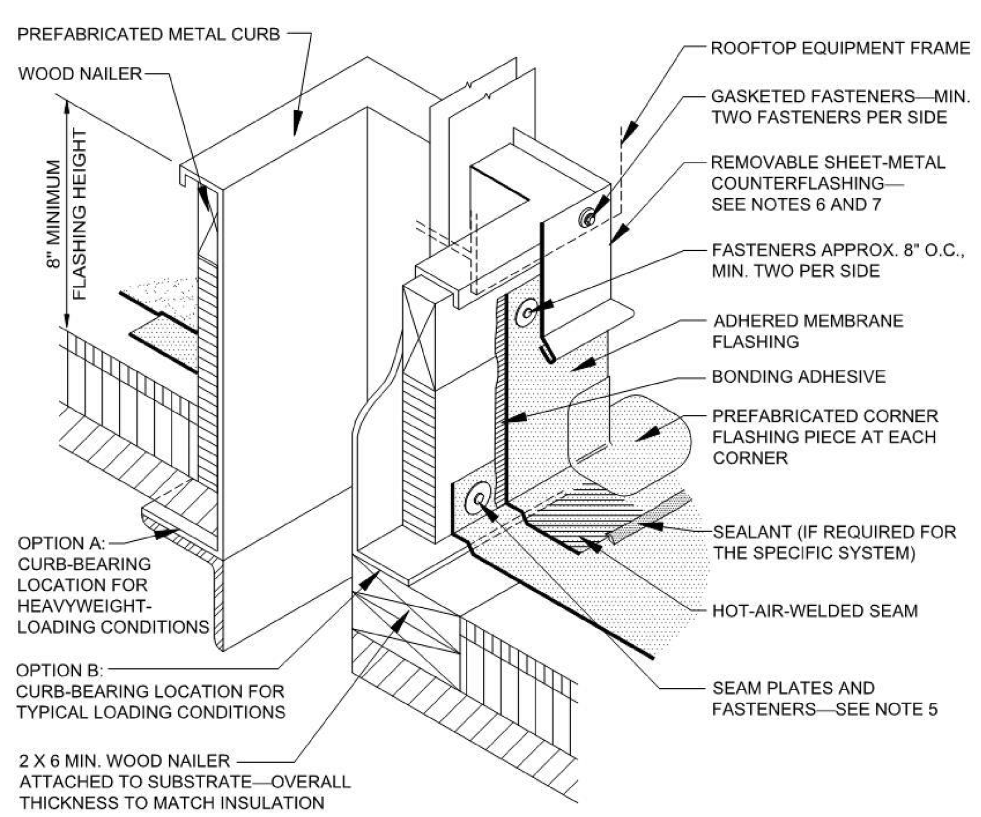

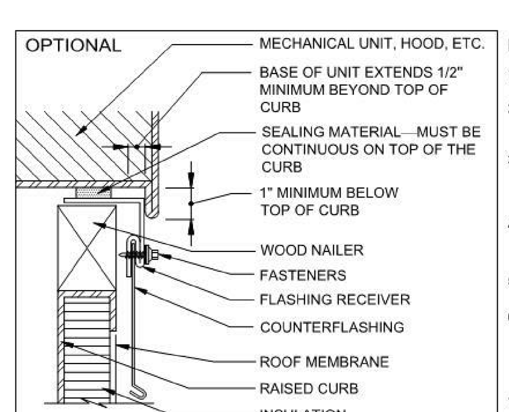

NOTES:

1. THE CURBS, TOP WOOD NAILER AND SEAL STRIP ARE TO BE SUPPLIED BY THE CURB MANUFACTURER.
2. WHEN POSSIBLE, THE MECHANICAL UNITS SHOULD NOT BE SET UNTIL THE ROOF MEMBRANE AND FLASHING HAVE BEEN INSTALLED.
3. WHERE THE SKYLIGHT, SCUTTLE OR SMOKE VENT FRAME OVERLAPS THE BASE FLASHING AT LEAST 3 INCHES, THE REMOVABLE SHEET-METAL COUNTERFLASHING IS NOT REQUIRED.
4. NRCA RECOMMENDS DESIGNERS CONSIDER PERMANENT INTERNAL OR EXTERNAL FALL-PROTECTION DEVICES AT ALL SKYLIGHTS.
5. REFER TO THE INTRODUCTION OF THE CONSTRUCTION DETAILS CHAPTER FOR ALTERNATIVE BASE SECUREMENT OPTIONS.
6. REFER TO THE ARCHITECTURAL METAL FLASHING SECTION OF THE NRCA ROOFING MANUAL: ARCHITECTURAL METAL FLASHING, CONDENSATION AND AIR LEAKAGE CONTROL, AND REROOFING FOR DESIGN, JOINERY AND SECUREMENT OPTIONS FOR COUNTERFLASHINGS.
7. REFER TO THE INTRODUCTION OF THE CONSTRUCTION DETAILS CHAPTER FOR ADDITIONAL INFORMATION.

BASE FLASHING AT PREFABRICATED METAL CURB

2015 *NOT DRAWN TO SCALE* **TP-13**

A2 / A8.21

BASE FLASHING AT CURB DETAIL

12" = 1'-0"

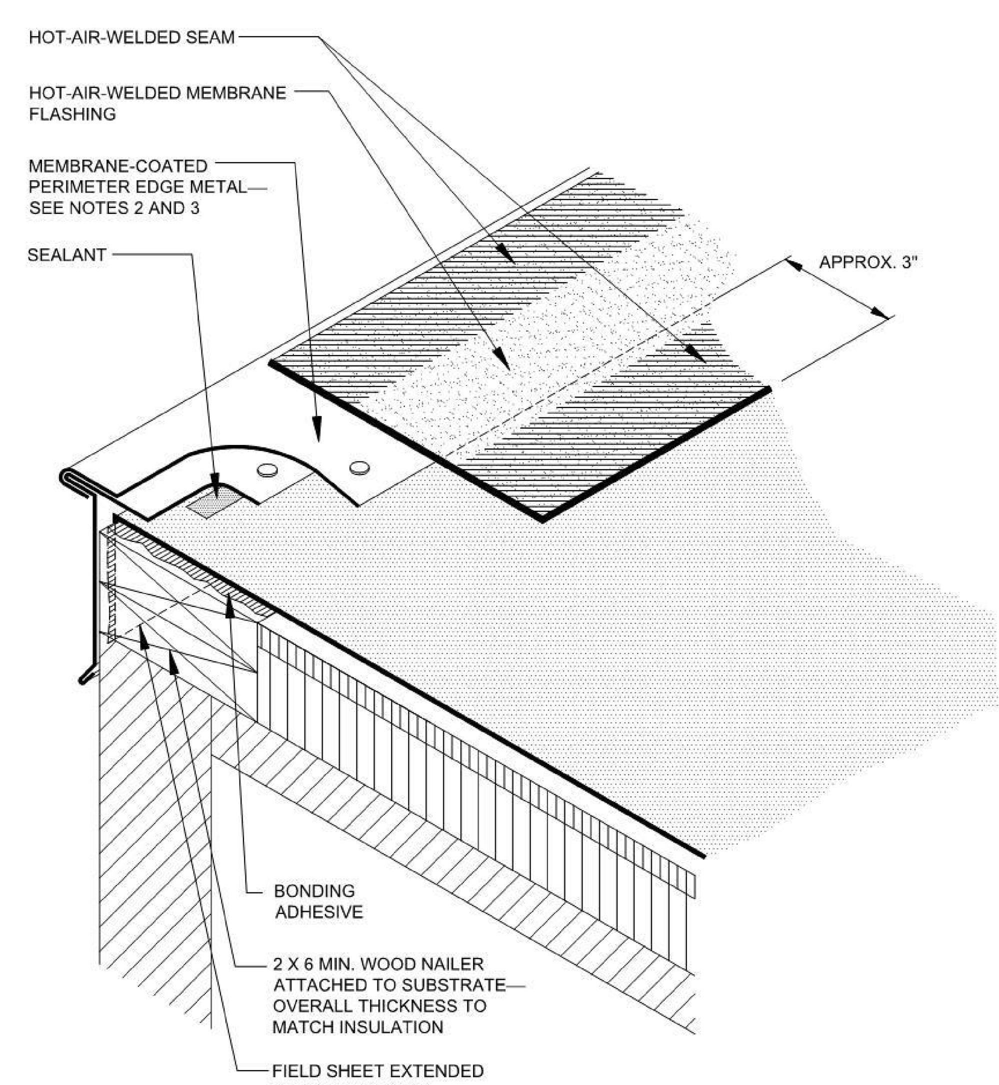

NOTES:

1. REFER TO MANUFACTURERS' SPECIFICATIONS FOR SPECIFIC REQUIREMENTS FOR BASE MEMBRANE ATTACHMENT AND PLACEMENT. MECHANICALLY ATTACHED SYSTEMS GENERALLY HAVE SPECIFIC ATTACHMENT REQUIREMENTS FOR PERIMETER LOCATIONS.
2. REFER TO THE ARCHITECTURAL METAL FLASHING SECTION OF THE NRCA ROOFING MANUAL: ARCHITECTURAL METAL FLASHING, CONDENSATION AND AIR LEAKAGE CONTROL, AND REROOFING FOR DESIGN, JOINERY AND SECUREMENT OPTIONS FOR GRAVEL STOPS.
3. REFER TO THE INTRODUCTION OF THE CONSTRUCTION DETAILS CHAPTER FOR ADDITIONAL INFORMATION.

EMBEDDED EDGE-METAL FLASHING [T-TYPE]
WITH MEMBRANE COATING

2015 *NOT DRAWN TO SCALE* **TP-5**

A3 / A8.21

ROOF EDGE DETAIL

12" = 1'-0"

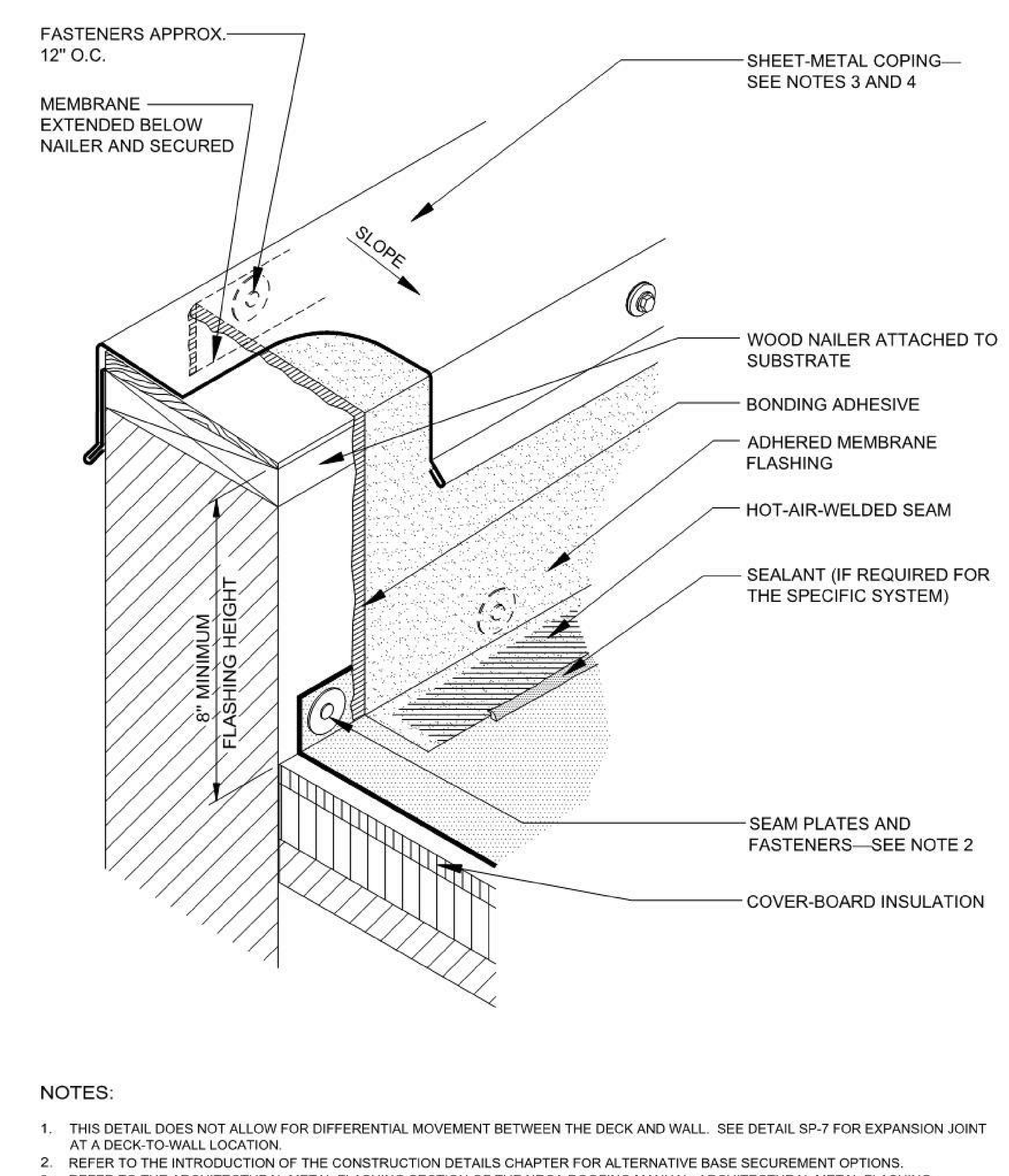

NOTES:

1. THIS DETAIL DOES NOT ALLOW FOR DIFFERENTIAL MOVEMENT BETWEEN THE DECK AND WALL. SEE DETAIL SP-7 FOR EXPANSION JOINT AT A DECK-TO-WALL LOCATION.
2. REFER TO THE INTRODUCTION OF THE CONSTRUCTION DETAILS CHAPTER FOR ALTERNATIVE BASE SECUREMENT OPTIONS.
3. REFER TO THE ARCHITECTURAL METAL FLASHING SECTION OF THE NRCA ROOFING MANUAL: ARCHITECTURAL METAL FLASHING, CONDENSATION AND AIR LEAKAGE CONTROL, AND REROOFING FOR DESIGN, JOINERY AND SECUREMENT OPTIONS FOR COPINGS.
4. REFER TO THE INTRODUCTION OF THE CONSTRUCTION DETAILS CHAPTER FOR ADDITIONAL INFORMATION.

BASE FLASHING AT PARAPET WALL WITH METAL COPING

2015 *NOT DRAWN TO SCALE* **TP-1**

A5 / A8.21

PARAPET DETAIL

12" = 1'-0"

mcmillan | pazdan | smith
ARCHITECTURE
asheville atlanta charleston charlotte greenville spartanburg
34 commerce street asheville, nc 28801 o: 828 398 5016
www.mcmillanpazdansmith.com

CONSULTANT LOGO

SEALS

McMILLAN PAZDAN SMITH, PLLC — REGISTERED ARCHITECTURAL CORPORATION — NORTH CAROLINA — CERT. NO. 52413 — GREENVILLE, SOUTH CAROLINA

CARLETON RAY COLLINS — REGISTERED ARCHITECT — 5686 — NORTH CAROLINA — ASHEVILLE, N.C.

10/14/16

City of Asheville

Water Resources Department

200 BINGHAM ROAD ASHEVILLE, NC 28806

SHEET ISSUE:

NO.	DATE	DESCRIPTION	BY
	10/14/16	BID SET	

PRINCIPAL IN CHARGE: CC
PROJECT ARCHITECT: BC
DRAWN BY: JH

SHEET TITLE:
DETAILS

SHEET NO. A8.21
PROJ. NO. 06191.00

10/20/2016 3:57:19 PM C:\Revit Local Projects\Project Path\016191_Water Resources Customer Service Center_R15_bcook@mcmillanpazdansmith.com.rvt
ALL DRAWINGS, SPECIFICATIONS AND COPIES THEREOF FURNISHED BY MCMILLAN PAZDAN SMITH ARCHITECTURE ARE AND SHALL REMAIN THE PROPERTY OF MCMILLAN PAZDAN SMITH ARCHITECTURE. THESE MATERIALS ARE TO BE USED ONLY WITH RESPECT TO THIS PROJECT AND NOT TO BE USED WITH ANY OTHER PROJECT, WITH THE EXCEPTION OF ONE CONTRACT SET FOR EACH PARTY TO THE CONTRACT, SUCH DOCUMENTS ARE TO BE RETURNED OR SUITABLY ACCOUNTED FOR TO MCMILLAN PAZDAN SMITH ARCHITECTURE UPON COMPLETION OF THE PROJECT. SUBMISSION OR DISTRIBUTION TO MEET OFFICIAL REGULATORY REQUIREMENTS OR FOR OTHER PURPOSES IN CONNECTION WITH THE PROJECT IS NOT TO BE CONSTRUED AS PUBLICATION IN DEROGATION OF MCMILLAN PAZDAN SMITH'S COMMON LAW COPYRIGHT OR OTHER RESERVED RIGHTS. COPYRIGHT 2011 MCMILLAN PAZDAN SMITH - ALL RIGHTS RESERVED