City of Asheville

Standard Specifications and Details Manual

City Council Approved
May 13, 2014
Revised
* June 14, 2016

** 1st Revision - June 9, 2015*

CONTENTS

Section 1 - General Requirements and Provisions

1A General Requirements

1A.01 Intent and Scope 1-1
1A.02 Authority 1-1
1A.03 Complete Streets Policy 1-1
1A.04 Minimum Standards 1-1
1A.05 Terminology 1-2
1A.06 Using this Manual 1-2
1A.07 Updating this Manual 1-2
1A.08 Inspections 1-2
1A.09 Other Standards and Requirements 1-3
1A.10 Alternative Materials and Methods of Construction and Installation 1-3
1A.11 Alterations, Modifications and Waivers
1A.11a Review Criteria 1-3
1A.11b Process
1A.11c Decision 1-4
1A.12 Appeals 1-4
1A.13 Violations 1-4

1B General Provisions

1B.01 Clearing and Grubbing 1-4
1B.02 Earthwork 1-5
1B.03 Maintenance of Traffic
1B.03a General 1-5
1B.03b Materials
1B.03c Installation and Maintenance 1-6
1B.04 Concrete 1-6
1B.05 Planting Within City Utilities Easements 1-7

Section 2 - Development Review and Approval

2A Development Project Review 2-1

Section 3 - Transportation Design Standards

3A General 3-1
3A.01 Purpose 3-1
3A.02 Standards Addressed 3-1

3B Streets 3-1
3B.01 Street Types Defined 3-1

3C Streets - Geometric Design 3-3
3C.01 Composition 3-3
3C.02 Internal Connectivity
3C.02a Extension to Property Line 3-3

3C.03 Horizontal Alignment
3C.03a Minimum Horizontal Curve **3-3**
3C.03b Superelevation **3-3**
3C.04 Vertical Alignment
3C.04a Minimum Street Grade
3C.04b Maximum Street Grade **3-3**
3C.04c Design Controls for Vertical Curves **3-4**
3C.05 Left Turn Lanes
3C.05a Storage Length
3C.05b Deceleration Length
3C.05c Tapers **3-4**
3C.06 Intersection and Street Spacing **3-5**
3C.06a Angles
3C.06b Minimum Street Spacing **3-5**
3C.06c Corner Radii **3-6**
3C.07 Sight Visibility Triangles at Intersections **3-7**
3C.08 Cul-de-sac Streets **3-8**
Short Cul-De-Sac
Long Cul-De-Sac **3-9**
3C.09 Curb and Gutter **3-9**
3C.10 Granite Curb **3-9**
3C.11 Curb Extension
3C.11a Maximum Street Grade **3-10**
3C.12 Medians
3C.12a Median Widths
3C.12b Design Vehicle **3-10**
3C.13 Vertical Clearance of Structures **3-10**
3D Streets - Sight Design **3-10**
3D.01 General **3-10**
3D.02 Stopping Sight Distance **3-11**
3D.03 Exceptions **3-11**
3E Streets - Pavement Design and Materials **3-11**
3E.01 General **3-11**
3E.02 Pavement Design
3E.02a Local Streets
3E.02b Collector and Arterial Streets
3E.02c Design Methods
3E.02d Rigid Pavement Design
3E.02e Roadway Widening
3E.02f Bridge Design **3-12**
3E.03 Pavement Materials - Streets
3E.03a Aggregate Base Course
3E.03b Bituminous Binder Course
3E.03c Bituminous Surface Course
3E.03d Tack Coat
3E.03e Concrete Pavement **3-12**

3E.03f Concrete Pavers **3-12**
3E.03i Geotextile Fabric **3-13**
3E.04 Pavement Materials - Cul-de-sac or Hammerhead Sections **3-13**
3E.05 Pavement Materials - Curb, Gutters, Driveways, and Sidewalks
3E.05a Strength
3E.05b Curing
3E.05c Aggregate
3E.05d Water
3E.05e Joints **3-13**
3D.05f Tool Joints **3-14**
3F Parking and Loading **3-14**
3G Driveways-Vehicular Site Access Management **3-15**
3G.01 General **3-15**
3G.02 Definition of a Driveway **3-16**
3H Multimodal Design Standards - Sidewalks **3-17**
3H.01 General **3-17**
3H.02 Sidewalks Required on New Streets
3H.02a Sidewalks on Both Side of a New Street **3-17**
3H.02b Sidewalks on One Side of a New Street **3-18**
3H.03 Sidewalks Required on Existing Streets
3H.03a New sidewalks
3H.03b Renovated sidewalks **3-18**
3H.04 Sidewalk Fee-in-Lieu of Construction **3-18**
3H.05 Sidewalk Design Standards **3-18**
3H.05a Obstacles in Sidewalk
3H.05b Meander
3H.05c Vertical Grade
3H.05d Cross Slope
3H.05e Accommodation of Transit **3-19**
3H.05f ADA ramps
3H.05g Detectable Warning
3H.05h Materials, Thickness, Joints, and Finish **3-20**
3H.05i Running Bond Pattern
3H.05j Drainage
3H.05k Sidewalk Drop Off
3H.05l Curbing
3H.05m Tree Planting **3-21**
3I Traffic Signals **3-21**
3I.01 General **3-21**
3J Multimodal Design Standards - Bicycle Facilities **3-22**
3J.01 On-Street Bicycle Facilities
3J.01a Bicycle Lane **3-22**
3J.01b Shared Roadways **3-24**

3J.01c Climbing Lanes
3J.01d Paved Striped Shoulders
3J.01e Complex Intersection **3-25**
3J.02 Off Street Bicycle Facility
3J.02a Bicycle Parking **3-26**
3J.02b Bridges
3J.02c Railroad Crossing **3-29**
3J.02d Bicycle Safe Storm Drainage Grates..... **3-29**
3J.02e Bicycle Detection and Signal Timing at Intersections..... **3-30**
3K Multimodal Design Standards - Transit Facilities **3-30**
3K.01 Street Side Factors **3-31**
3K.02 Curb Side Factors **3-32**
3K.03 Permit Requirements **3-35**

Section 4 - Site and Street Lighting Standards

4A Street Lighting **4-1**
4A.01 General **4-1**
4A.01a Easement Required
4A.01b New Development
4A.01c Other New Installation
4A.01d Annexed Area
4A.01e Priorities for Installation **4-1**
4A.02 Illumination, Height and Spacing Requirements **4-2**
4B Decorative or Other Non-standard Street Lighting **4-2**

Section 5 - Utilities

5A General **5-1**
5A.01Utility Layouts **5-1**
5B Fiber Optic System **5-3**
5B.01 General **5-3**
5B.02 Fiber Optic Duct Systems **5-3**
5B.02 Installation of Fiber Optic Duct System Required **5-3**
5B.02 Fiber Optic Duct System Installation Standards
5B.02a Depth
5B.02b Locator Wire **5-3**
5B.02c Urban Locations
5B.02d Pullboxes/Handholes
5B.02e Under-Street Installation **5-4**
5C Other Utilities **5-4**
5C.01 Water Services **5-4**
5C.02 Stormwater Services **5-4**
5D Pipe Trenches..... **5-4**
5D.01 Excavation and Preparation of Trenches **5-4**
5D.02 Pipe Laying and Backfilling **5-4**
5D.03 Boring and Jacking **5-4**

5E Utility Cuts Within City Maintained Street Rights-of Way **5-6**
5E.01 Trench and Cut Repairs
5E.01a Asphalt Utility Cuts **5-6**
5E.01b Concrete Utility Cuts
5E.01c Soil Utility Cuts
5E.01d Other Utility Cuts **5-7**
5E.02 Excess Spoil Piles **5-7**
5E.03 Crack and Joint Sealing **5-7**
5E.03a Hot-poured Rubber Asphalt
5E.03b Modified Asphalt Compound Tape
5E.03c Traffic Signal Loop Lines **5-8**
5E.04 Right-of-Way Cut Permit
5E.04a Permit Application
5E.04b Permit Fee **5-8**

Section 6 - Public Safety Standards

6A General **6-1**
6B Fire Safety Standards **6-1**
6B.01 General **6-1**
6B.02 Specific Terminology **6-1**
6B.03 Reference Material **6-2**
6C Fire Apparatus Access Road **6-2**
6C.01 General **6-2**
6C.02 Scope **6-2**
6C.03 Reference Material
6C.03a Access Road
6C.03b Road Grade
6C.03c Turning Radius
6C.03d Dead Ends
6C.03e Fire Apparatus Access Road Gates **6-2**
6C.04 Specific Requirements for Various Classes of Development
6C.03a One or Two-Family Residential Developments
6C.03a Multi-Family Residential Developments
6C.03a Commercial Developments
6C.03a High Rise and Mid Rise Developments **6-3**
6D Fire Lanes **6-4**
6D.01 Intent and Scope **6-4**
6D.02 Installation **6-4**
6D.03 Design **6-4**
6D.04 Bollards **6-4**
6D.05 Signs and Markings **6-4**
6D.06 Review **6-4**
6E Fire Hydrants **6-4**
6E.01 Fire Hydrant Adjacent to Parallel or Within Parking Lots **6-5**
6F Fire Flow Requirements for Building **6-6**
6F.01 General **6-6**

6F.02 Specific Terminology **6-6**
6F.03 Types of Water Supply **6-6**
6F.03a Water Storage Tanks
6F.03b Private Water Systems **6-6**
6F.04 Area Separation and Decreases
6F.04a Area Separation
6F.04b Decreases
6F.04c Appeals **6-6**
6F.05 Fire Flow Requirements for Buildings
6F.05a Area Separation
6F.05b Appeals **6-7**
6G Knox Box Key Control Program **6-7**
6G.01 General **6-7**
6G.02 Knox Box Defined **6-7**
6G.03 Scope **6-8**
6H Traffic Calming **6-8**
6H.01 Purpose **6-8**
6H.02 Traffic Calming Types **6-8**
6I Retaining Wall Barriers **6-8**
6J Crime Prevention Through Environmental Design (CPTED) Strategies **6-9**
6J.01 Purpose **6-9**
6J.02 The Four Strategies of CPTED from the National Crime Prevention Council
6J.02a Natural Surveillance
6J.02b Territorial Reinforcement
6J.02c Natural Access Control
6J.02d Target Hardening **6-9**
6J.03 Application **6-9**
6J.04 Examples of CPTED in Action **6-10**

Section 7 - Soil Erosion and Sedimentation Control

7A General **7-1**
7B Temporary Erosion Control Measures **7-1**
7B.01a Silt Fence
7B.01b Silt Fence Reinforced Stabilized Outlet
7B.01c Construction Entrance
7B.01d Sediment Basins
7B.01e Sediment Traps **7-1**
7B.01f Check Dam
7B.01g Inlet Protection
7B.01h Temporary Seeding
7B.01i Seeding and Mulching **7-2**
7C Permanent Erosion Control Measures **7-3**
7C.01 Types of Permanent Measures **7-3**

7C.01a Ground Cover
7C.01b Mulch
7C.01c Disturbed Stream Buffers
7C.01d Permanent Ground Cover
7C.01e Energy Dissipaters **7-4**
7D Computations **7-4**
7D.01 Scope **7-4**
7E Construction Sequence **7-4**
7F Formal Plan Submittal Requirements **7-5**
7G As-Built and Closeout Document Requirements **7-5**

Section 8 - Stormwater

8A General **8-1**
8B Storm Drains **8-1**
8B.01 Location **8-1**
8B.02 Pipe Materials
8B.02a Minimum Size
8B.02b Reinforced Concrete Pipe
8B.02c Corrugated Metal Pipe (CMP) or Pipe-Arch **8-1**
8B.02d Pipe Location Devices
8B.02e High Density Polyethylene Corrugated Pipe (HDPE)
8B.02f Other Pipe Materials **8-2**
8B.03 Structure Materials
8B.03a Manhole / Structures Steps
8B.03b Curb Inlets and Catch Basins
8B.03c Landscaping Yard Inlet
8B.03d Headwalls and Endwalls **8-2**
8B.04 Size and Design **8-2**
8B.05 Installation **8-3**
8B.06 Pipe Inlets and Outlets **8-3**
8B.07 Street Drainage **8-3**
8B.08 Runoff Quantity for Pipe Sizing
8B.08a Manning Equation **8-4**
8B.08b Grade
8B.08c Alignment
8B.08d Junction Box
8B.08e Inlet Drainage Structures
8B.08f Special Hydraulic Structures
8B.08g Private Easements
8B.08h Bedding **8-5**
8B.09 Open Channel Design Standards **8-5**
8B.09a Manning Equation
8B.09b Channel Cross Section and Grade **8-6**
8B.09c Side Slopes
8B.09d Disposition of Spoil
8B.09e Construction and Materials **8-7**

8B.09f Easements **8-7**
8C Stormwater Management **8-7**
8C.01 Stormwater Control Measures **8-7**
8C.02 Design for Stormwater Quantity
8C.02a Design Storm
8C.02b Stage Discharge
8C.02c Storm Routing **8-7**
8C.03 Stormwater Quality Control **8-8**
8C.04 Retention and Detention Basin Design **8-8**
8C.06 Dry Detention Basin Design
8C.06a Dam Safety Act **8-9**
8C.07 Underground Storage **8-9**
8C.08 Proprietary Quality Control Devices **8-9**
8C.09 Pervious Pavements **8-9**
8C.10 Environmental Systems and Low Impact Devices **8-9**
8C.11 Cisterns
8C.11a Annual Inspections **8-10**
8D Formal Plan Submittal **8-10**
8E Final As-built Plans and Closeout Submittals **8-10**
8E.01a Closeout Documents
8E.01b Final As-built Record Drawing Specifications **8-10**

Section 9 - Appendices

9A Appendix A: Terminology, Words, and Abbreviations **9-1**
9B Appendix B: Preferred Tree Species **9-3**
9B.01 Small Deciduous Trees: 15' - 40' **9-3**
9B.02 Large Deciduous Trees: > 40' **9-4**
9B.03 Evergreens Trees **9-7**
9B.04 Small Deciduous Shrubs 2' - 4' **9-9**
9B.05 Groundcovers **9-9**
9B.06 Small Evergreen Shrubs 2' - 4' **9-10**
9C Appendix C: Ground Cover
9C.01 Temporary Cover **9-11**
9C.02 Permanent Cover **9-11**
9C.03 Ground Cover in Stream Buffers **9-11**
9C.04 Soil Stabilization **9-11**
9C.05 Conditions **9-11**
9D Appendix D: Requirements for Formal Grading, Erosion Control, and Stormwater Plan **9-13**
9E Appendix E: Storm Drainage and Stormwater As-built Specification **9-17**

Section 10 - Standard Details

10A List of Standard Details **10-1**
10A.01 Section 3 - Transportation Design Standards **10-1**
Std No. 3.01 - Standard Street Sections (Suburban Collector, Urban Collector & Local

Std No. 3.02 - Standard Street Sections (Alternate Access & Alley)
Std No. 3.03 - Roadway Widening
Std No. 3.04 - Interlocked Concrete Paver Street Section
Std No. 3.05 - Standard Section Without Curb & Gutter
Std No. 3.06 - Standard Section Without Sidewalk
Std No. 3.07 - Standard Street Cross Section Sowing Utility Locations
Std No. 3.08 - Cul-de-Sac Dimensions
Std No. 3.09 - End Islands for Parking Lots
Std No. 3.10 - A.B.C. Under 2’-6” Curb & Gutter
Std No. 3.10A - Valley Curb Detail
Std No. 3.11 - Standard Concrete Curb & Gutter
Std No. 3.11A - Standard Stand-up, Mountable & Median Curb
Std No. 3.11B - Median Island w/Standard Mountable Curb
Std No. 3.11C - Median Island w/Standard Stand-up Curb
Std No. 3.11D - Granite Curb Installation
Std No. 3.12 - Standard Method of Removing Existing Curb for a Driveway Apron Installation
Std No. 3.13 - Standard Method of Ending Curb and Gutter
Std No. 3.14 - Pop-up Drainage Emitter
Std No. 3.15 - Standard Driveway Access Apron With Sidewalk & Utility Strip
Std No. 3.15A - Standard Driveway Access Apron With Sidewalk Adjacent to Curb
Std No. 3.15B - Standard Driveway Access Apron With Curb and Gutter & Without Sidewalk
Std No. 3.15C - Standard Driveway Access Apron Without Curb & Without Sidewalk
Std No. 3.15D - Standard Driveway Access Apron With Stand-up Curb & Without Sidewalk
Std No. 3.16 - Standard Concrete Sidewalk
Std No. 3.16A - Monolithic Curb & Sidewalk
Std No. 3.16B - Standard Concrete Sidewalk With Bond Pattern
Std No. 3.17 - Standard Wheel Chair Ramp
Std No. 3.17A - Standard Wheel Chair Ramp
Std No. 3.17B - Standard Wheel Chair Ramp
Std No. 3.17C - Standard Wheel Chair Ramp
Std No. 3.18 - Standard Pavement Widening and Taper Markings
Std No. 3.19 - Temporary Barricade for Dead End Roads
Std No. 3.20 - Brick Sidewalks at Driveway Entrances
Std No. 3.21 - New Brick Sidewalk
Std No. 3.22 - Sidewalk Tree Pit, Reinforced Concrete Sidewalk
Std No. 3.22A - Sidewalk Tree Pit, Structural Soil
Std No. 3.22B - Sidewalk Tree Pit, Silva Cell
Std No. 3.22C - Sidewalk Tree Pit, Large Tree Grate with Washed Stone Border
Std No. 3.22D - Sidewalk Tree Pit, Standard Tree Grate with Washed Stone Border
Std No. 3.22E - Sidewalk Tree Grate & Frame
Std No. 3.22F - Tree & Shrub Planting
Std No. 3.23 - Radius Concrete Keystone
Std No. 3.24 - Lamp Post Base
Std No. 3.25 - Concrete Circle
Std No. 3.26 - Mountable Concrete Island
Std No. 3.27 - Mountable Concrete Traffic Separator Island
Std No. 3.28 - 22’ Collector Street Speed Table
Std No. 3.29 - 14’ Collector Street Speed Hump
Std No. 3.30 - High Visibility Cross Walk

Std No. 3.31 - Collector Street Speed Table and Hump Markings
Std No. 3.32 - Lateral Shift Island w/Standard Mountable Curb
Std No. 3.33 - Lateral Shift Island w/Standard Stand-up Curb
Std No. 3.34 - Traffic Island w/Standard Mountable Curb
Std No. 3.35 - Pedestrian Safety Railing

10A.02 Section 5 - Utilities ……..……..……..……. **10-2**

Std No. 5.01 - Pavement Removal and Replacement
Std No. 5.02 - Rigid Pavement Repair
Std No. 5.03 - Gravel Surface Repair and Bedding
Std No. 5.04 - Pavement Removal & Replacement for Perpendicular Cut
Std No. 5.05 - Asphalt Driveway Replacement
Std No. 5.06 - Carrier Pipe in Steel Encasement
Std No. 5.07 - Shoulder Repair
Std No. 5.08 - Typical Steel Encasement and Carrier Pipe Installation Under Rail Road
Std No. 5.09 - Road Pavement Repair Utility Trench Width Only
Std No. 5.10 - Road Pavement Repair

10A.03 Section 7 - Soil Erosion and Sedimentation Control ……..……. **10-2**

Std No. 7.01 - Standard Temporary Silt Fence
Std No. 7.01A - Standard Temporary Silt Fence With Reinforced Stabilized Outlet
Std No. 7.02 - Residential Construction Entrance
Std No. 7.03 - Commercial Construction Entrance
Std No. 7.04 - Diversion Ditch
Std No. 7.05 - Wattle Detail
Std No. 7.06 - Rip Rap Lined Channels
Std No. 7.07 - Check Dam
Std No. 7.08 - Temporary Sediment Trap
Std No. 7.09 - Skimmer Sediment Basin
Std No. 7.09A - Skimmer detail
Std No. 7.10 - Gravel & Rip Rap Pipe Inlet Protection
Std No. 7.11 - Standard Catch Basin Inlet Protection
Std No. 7.11A - Block & Gravel Inlet Protection

10A.04 Section 8 - Stormwater ……..……...……. **10-2**

Std No. 8.01 - Standard Yard Inlet with Concrete Slab
Std No. 8.02 - Standard Yard Inlet with Grate and Frame
Std No. 8.03 - Precast Concrete Catch Basin
Std No. 8.03A - Precast Concrete Catch Basin
Std No. 8.04 - Precast Concrete Manhole Junction Box
Std No. 8.04A - Precast Concrete Manhole Junction Box
Std No. 8.05 - Curb Inlet for 18” & 24” Curb & Gutter
Std No. 8.06 - Storm Drain Pipe Location Methods

SECTION 1 - GENERAL REQUIREMENTS AND PROVISIONS

1A General Requirements

1A.01 Intent and Scope

The *Standards and Specifications Manual* establishes development requirements that protect the public health, safety, and welfare through the provision and maintenance of public or private infrastructure improvements related to developing, redeveloping, and subdividing land, as well as providing necessary rights-of-way, transportation, and utility services. The Manual's requirements apply to all properties within the City of Asheville.

1A.02 Authority

The City will review, approve, and inspect the design and construction of infrastructure improvements within the public or private right-of-way or easements and site developments to ensure compliance with this Manual in addition to standards contained in the City of Asheville Unified Development Ordinance (UDO). The City has the authority for approving, accepting, or denying the design and construction of any improvement.

1A.03 Complete Streets Policy

The City has a Complete Streets policy, which says that the City of Asheville will plan for, design, construct, operate and maintain appropriate facilities for travel, and as appropriate, for resting or parking, for all users in all new construction and retrofit or reconstructions projects. The term "all users" includes pedestrians, bicyclists, transit vehicles and riders, children, the elderly, and people with disabilities.

1A.04 Minimum Standards

The Standard Specifications and Details Manual establishes minimum requirements that shall be met or exceeded when designing and constructing all public or private infrastructure improvements described in the Manual. Whenever the requirements of this Manual are found to be inconsistent with any other adopted standards, regulations, or codes, the more restrictive standards, regulations, or codes shall control. Reference to any code, regulation, standard, criterion, or manual of any technical society, organization, or association, or to any law or regulation of any governmental authority, whether such reference be specific or by implication, shall mean the most recently adopted or current law, code, regulation, standard, criterion, or manual in effect at the time of City review of any project.

Other standards, regulations, or codes referenced herein may include, but are not limited to, the City of Asheville Unified Development Ordinance, A Policy on Geometric Design of Highways and Streets (Green Book), the Manual on Uniform Traffic Control Devices, the Proposed Accessibility Guidelines for Pedestrian Facilities in the Public Right-of-Way, the North Carolina Erosion and Sediment Control Planning and Design Manual, the North Carolina Erosion and Sediment Control Field Manual, the North Carolina Erosion and Sediment Control Inspector's Guide, the North Carolina Stormwater BMP Manual, and the North Carolina Minimum Design Criteria for Stormwater Control Measures.

1A.05 Terminology

Terms, words, and abbreviations used in this Manual are defined in **Appendix A**.

1A.06 Using this Manual

This Manual is to be used when designing and constructing all public improvements and infrastructure within the City. For the purposes of this document, public improvements and infrastructure include but are not limited to: streets, sidewalks, trails, curb and gutter, curb cuts, streetscaping, landscaping, fire hydrants, manholes, storm water mains, inlets, drainage swales and channels, and other infrastructure improvements intended for public purposes or for the benefit of the community or as required by ordinance.

This Manual also provides design and construction requirements to be used when developing private infrastructure improvements that are used by and affect the public. The required private improvements associated with property development include but are not limited to: traffic mitigation, site access and driveway design, storm water site drainage and detention pond improvements, water quality and erosion control measures, streets, sidewalks, trails, curb and gutter, curb cuts, streetscaping, landscaping, fire hydrants, manholes, storm water mains, inlets, drainage swales and channels, and other infrastructure improvements.

1A.07 Updating this Manual

City Council will approve all revisions and updates of this Manual. The City Manager or his/her designee will review this Manual periodically, or as needed, and will recommend revisions and/or updates of this Manual to City Council, so that the Manual continues to reflect generally accepted professional technical standards and specifications and City policy.

1A.08 Inspections

All work must be inspected and approved by the City Engineer or his/her designee to insure that the work is complete in accordance with the approved plans. The most recent set of approved plans must remain on the site at all times while construction activity is occurring for use by the City Engineer or his/her designee. The designee will typically be a City Inspector.

The City Engineer’s office shall be given sufficient time to schedule and coordinate various inspections. It is the responsibility of the contractor to have the project site prepared for inspection at the time the City Engineer or his/her designee arrives. The contractor shall provide the necessary personnel and equipment required as a part of the inspection process.

The presence of the City Engineer or his/her designee at the work site shall in no way reduce the contractor's responsibility for conformity with the plans and specifications. Should the City Engineer or his/her designee accept materials or work that does not conform with plans and specifications, whether from lack of discovery or for any other reason, it shall in no way prevent later rejection or corrections to the unsatisfactory materials or work when discovered. The contractor shall have no claim for losses suffered due to any necessary removals or repairs resulting from the unsatisfactory work.

Any work which cannot be visually observed by the City Engineer or his/her designee at the time of inspection, shall, at the City Engineer’s or his/her designee request, be exposed and be made available for inspection at the contractor's expense. Work performed before or after normal work hours or during the weekend or on City holidays shall comply with the requirements of this Manual and shall include only such tasks that do not require observation by the City Engineer or his/her designee.

1A.09 Other Standards and Requirements

This Manual describes the minimum requirements and specifications for designing adequate and functional improvements. However, the design of the improvements also depends on the land use, zoning and comprehensive planning requirements for the City, as well as the specific site geography of the land to be improved or developed.

The City's review for approval of public and private improvements occurs as part of the development review process that distributes design applications to staff in multiple departments, divisions, and agencies as described in "Section 2 - Plan Review and Approval".

1A.10 Alternative Materials and Methods of Construction and Installation

The provisions of this Manual are not intended to prevent the use of any materials or methods of construction and installation not specifically prescribed in the Manual, provided that the alternative materials or methods of construction and installation have been approved and their use authorized by the City Engineer or his/her designee.

The City Engineer or his/her designee may approve an alternate material or method of construction or installation, provided the proposed design is satisfactory and complies with the provisions of this Manual and that the material, method, or work offered is, for the purpose intended, at least the equivalent of applicable requirements described in this Manual in suitability, strength, effectiveness, durability, safety, and sanitation.

The City Engineer or his/her designee will require that sufficient evidence be submitted to substantiate any claims that may be made regarding an alternate material or method of construction. The details of any action granting approval of an alternate material or method will be recorded and entered in the files of the City.

A formal process is established for requesting, evaluating and approving any alteration, modification or waiver of the requirements of this Manual in the following section.

1A.11 Alterations, Modifications and Waivers

Alterations, modifications or waivers of the requirements of this Manual may be requested. Projects which are granted an alteration, modification or waiver under this process are deemed to be in compliance with the requirements of this Manual with respect to the provision(s) so altered, modified or waived. The following procedures shall be utilized in such requests.

1A.11a Review Criteria. No alteration, modification, or waiver of the strict application of any provision of this Manual shall be granted unless the applicant demonstrates and the City Engineer or his/her designee finds that:

1. the alteration, modification, or waiver would result in a solution consistent with the goals of the City of Asheville as established in adopted plans, policies and guidelines;
2. the alteration, modification, or waiver will not harm the adjacent land owners, the neighborhood, or the welfare of the public at large;
3. the alteration, modification, or waiver is consistent with sound engineering practices and will at least equal the suitability, strength, effectiveness, fire resistance, durability, safety, and other performance requirements prescribed in this Manual; and
4. the alternation, modification, or waiver will not create an additional maintenance or financial burden for the City or the public.

1A.11b Process. A request for an alteration, modification, or waiver from this Manual shall be submitted in writing to the City Engineer. The request shall state in detail the specific sections and subsections of this Manual requested to be altered, modified, or waived, and the request shall describe in detail why the requested waiver, alteration, or modification meets the above criteria. The City Engineer may require additional documentation to support the request.

1A.11c Decision. The City Engineer or his/her designee will advise the applicant, in writing, of the decision of the requested alteration, modification, or waiver. In granting any alteration, modification, or waiver to the requirements of this Manual, the City Engineer or his/her designee may impose specific conditions necessary to ensure that the criteria described above are, and will remain, satisfied.

1A.12 Appeals

Appeals of decisions made by the City Engineer or his/her designee in implementing the requirements of this Manual, including but not limited to alterations, modifications and waivers, shall be to the Board of Adjustment in accordance with the Unified Development Ordinance, including Sections 7-3-3 and 7-6-2.

1A.13 Violations

Violators of the provisions of the *Standards and Specifications Manual* may be subject to a civil penalty. The maximum civil penalty for a violation is $10,000. A civil penalty may be assessed from the date of the violation. Each day of a continuing violation shall constitute a separate violation.

Any civil penalty assessed shall be recovered by the City in a civil action in the nature of debt, to be brought in the Buncombe County Superior Court if the offender fails to give notice of timely appeal or fails to pay the penalty within the prescribed period of time after being cited for the violation.

1B General Provisions

1B.01 Clearing and Grubbing

The work of clearing and grubbing shall consist of the cutting, removal, and satisfactory disposal of all vegetation and all surface debris. Clearing and grubbing shall be conducted in a manner to prevent damage to vegetation that is intended to remain growing and also to prevent damage to adjacent property.

1B.02 Earthwork

Earthwork shall be defined as removal of earth or soft rock from its natural location or as the depositing of such material into the proper fill areas as designated on the approved plans.

Rock excavation shall be defined, in the opinion of the City Engineer, as all ledge rock or boulders over 0.5 cubic yard that cannot be excavated without blasting.

A written permit for blasting must be obtained from the Asheville Fire Department a minimum of 24 hours before any explosive material or blasting agents are used or stored within the Corporate Limits of the City of Asheville. Blasting should be conducted by a certified professional in the State of North Carolina.

Trenches deeper than 10 feet located within the public right-of-way may require positive shoring. Trenches deeper than 4 feet located adjacent to a roadway may require positive shoring.

Fill material shall be free from construction material, debris, frozen material, organic matter, unstable material, or contaminated soils. For the top two (2) feet below finished sub-grade, no fill material shall be used weighing less than 100 pounds per cubic foot. The top two (2) feet of backfill material shall be free from stones greater than two (2) inches.

For all areas under a proposed roadway, the top 12 inches of sub-base, and the entire base course shall be compacted to a density of 100 percent maximum Standard Proctor dry density as determined by the American Association of State and Highway Transportation Official (AASHTO) method T99. For that portion of fill under roadways and extending at a slope of 1 : 1 beyond the back of curb, compact to a density of no less than 95 percent of the maximum Standard Proctor dry density as determined by AASHTO method T99. Fill material shall be placed in lifts of six (6) inches or less of uncompacted soil.

Other fill material shall be compacted to a density of no less than 95 percent of the maximum Standard Proctor dry density as determined by AASHTO method T99. Backfill material shall be placed in lifts of eight (8) inches or less of uncompacted soil.

1B.03 Maintenance of Traffic

1B.03a General. When construction occurs in a public right-of-way, traffic control devices must be erected, maintained, relocated, and removed in accordance with the plans, specifications, and the Manual on Uniform Traffic Control Devices (MUTCD). This requirement shall apply for all construction occurring on streets and rights-of-way, including construction or repairs by utility companies. The MUTCD referred to in this provision shall be the current edition of the *Manual on Uniform Traffic Control Devices for Streets and Highways*, as prepared and published by the Federal Highway Administration. The current edition shall be the edition current at the time of construction.

Traffic control devices shall include but not be limited to signs, drums, barricades, cones, delineators, flashing arrow panels, temporary guardrail, temporary concrete median barrier, vehicle-mounted temporary impact attenuators, pavement markings, raised reflective pavement markers, flaggers and pilot vehicles as specified in the current edition of the MUTCD.

It should be noted that the MUTCD has specific requirements to provide accessible alternate routes for pedestrians when sidewalks are closed and a contractor shall provide accessible alternate routes when applicable.

Notification of all applicable emergency service agencies must occur prior to closing a street. These agencies may include Asheville Fire Department, 911 dispatchers, Asheville Police Department's Communications Division, Buncombe County Sheriffs Department, and Buncombe County Emergency Services Division.

1B.03b Materials. Materials used in the fabrication and installation of construction traffic control devices shall be in accordance with the applicable provisions of the MUTCD. All enclosed lens sheeting required for use on traffic control devices shall have an identification mark on the surface. This mark signifies that the sheeting meets the requirements of Federal Specification L-S-300C for Minimum Reflectivity 1 Sheeting and Tape. The identification mark shall not interfere with the function of the device, but shall be visible both day and under illumination at night without the use of special devices.

1B.03c Installation and Maintenance. Existing public streets and sidewalks shall be kept open to traffic at all times by the Contractor unless permission to close the street, or portions thereof, is granted by the City Engineer or his/her designee, and NCDOT's District Engineer or a designated representative (for NCDOT roads within City Limits), a minimum of 5 days prior to any closing or partial closing. The City of Asheville Public Works Department is exempt from this approval process for City maintained streets. The City of Asheville Communications Division of the Police Department and emergency 911 dispatchers must be contacted by the contractor a minimum of 24 hours before any streets are totally or partially closed.

Work on any project shall not start until all traffic control devices required for the particular work activity are properly installed. Traffic control devices shall be properly maintained, clearly visible, clean and operational during the time they are in use. During periods when use of the devices is not warranted, they shall be removed from the work area, covered and/or otherwise positioned so that they do not convey their message to the traveling public.

The location, legends, sheeting, dimension, number of supports, and horizontal and vertical placement of warning signs, barricades, and other traffic control devices shall be as required by the approved plans and the MUTCD.

Weeds, brush, trees, construction materials, equipment, etc. shall not be allowed to obscure any operational traffic control device.

Competent and properly trained, attired and equipped flaggers, using "stop" and "slow" paddles shall be provided when two-way traffic cannot be maintained or as determined by the City Engineer or his/her designee.

The Contractor shall assume full responsibility for the continuous and expeditious maintenance or replacement of all construction warning signs, barricades, and other traffic control devices. The Contractor shall continuously review and maintain all traffic control measures to assure that adequate provisions have been made for the safety of the public and workers. Failure to maintain all traffic control devices in a satisfactory condition shall be cause for suspension of construction operations until proper traffic control is re-established.

1B.04 Concrete

Concrete shall be plant or transit-mixed concrete conforming to ASTM C33 for aggregates and ASTM C94 for ready-mixed concrete. Any concrete poured that has a slump over four (4) inches as per ASTM C143, or has a batched time of more than 90 minutes, will be considered unacceptable. The City Engineer or his/her designee may allow a minimum plant mix of 4,000 psi with a slump over four (4) inches provided that it is a certified pump mix. Concrete shall not be deposited on frozen sub-grade. Concrete shall not be poured when the air temperature is 40 degrees Fahrenheit or below, and the predicted low temperature for the succeeding 24 hour period is less than 32 degrees Fahrenheit. Also, concrete shall not be poured when the air temperature is over 95 degrees Fahrenheit.

All concrete when placed in the forms shall have a temperature of between 50 and 90 degrees Fahrenheit and shall be maintained at a temperature of not less than 50 degrees Fahrenheit for at least 72 hours for normal concrete and 24 hours for high early strength concrete, or for as much time as is necessary to secure the proper rate of curing and designed compressive strength. Concrete shall be air entrained with 5-7% air. Retarders and accelerators shall be used only within the manufactures specification and clearly documented on the loading tickets.

Placed concrete should not be allowed to free fall more than 48 inches. Forms should be pre-wetted prior to the placement of concrete.

Placement of pervious concrete shall be approved by the City Engineer prior to installation. A pervious pavement design will require a maintenance plan if utilized as part of the stormwater management plan.

1B.05 Planting Within City Utilities Easements

A utility easement shall mean any area to which the City has unlimited access for servicing utility lines but outside of the sight distance triangle. Any plantings installed within a utility easement may be damaged or destroyed during the course of servicing. The City is not liable for damage to any improvements or plantings within a utility easement. The City will reseed any bare or disturbed soil for erosion control purposes as necessary.

Small and medium shrubs, groundcovers, or grasses may be planted within a utility easement. Small trees (defined as being under 40 feet in height at maturity) may be planted a minimum of 10 feet from the centerline of the closest pipeline within the easement or 10 feet from the center of the easement, whichever is greater. Small trees as defined above may include: Redbud, Fringe Tree, Serviceberry, Golden Raintree, Hawthorne, Hornbeam, Saucer or Star Magnolia, Sassafras, Smoke Tree, Sourwood, or Sumac. Large tree species shall not be placed within any City utility easement. A complete list of preferred small tree species are shown in the "Small Deciduous Trees: 15' - 40' " category of **Appendix B.** Any other small tree species to be approved by the City Arborist.

Plantings on any easement under or over the rights of another utility (Metropolitan Sewerage District, Progress Energy, AT & T, Public Service North Carolina, City of Asheville Water Department, Charter Communications, etc.) must be approved in advance by the utility company and shall comply with their standards.

SECTION 2 - DEVELOPMENT REVIEW AND APPROVAL

2A Development Project Review

Development review involves many different disciplines of the City including, but not limited to, Planning & Urban Design, Development Services Department, Transportation, Fire, and Public Works. The development review process and type of plans required with an application submittal vary and depend upon the type of project that is proposed.

Projects of a smaller size and scale are generally reviewed and approved by City staff. Larger projects and projects requiring zoning map amendments undergo a more rigorous process that begins with a review by the Asheville Technical Review Committee (TRC) and in most cases, also includes review during a public hearing by the Asheville Planning and Zoning Commission (PZC) and/or the Asheville City Council (CC). Project sites located in certain districts (e.g. Downtown, River, Historic Districts, etc.) may also be subject to review by other public bodies. Applicants should also refer to the City's **Unified Development Ordinance** (UDO) or contact the Planning & Urban Design and Development Services Department for additional and more specific information.

SECTION 3 - TRANSPORTATION DESIGN STANDARDS

3A General

3A.01 Purpose

These Transportation Design Standards are intended to provide for an integrated transportation system for all transportation modes, including pedestrian, bicycle, transit, and motor vehicle. The purpose of these standards is to regulate new development and redevelopment of previously developed sites within the corporate limits of the City of Asheville.

3A.02 Standards Addressed

These Transportation Design Standards are intended to address the design of the following components of the City of Asheville transportation system:

- Streets
  - *Street Types Defined*
  - *Street Width and Curbing Design*
  - *Street Geometric Design*
  - *Sight Distance Requirements*
- Driveways
- Sidewalks
- Bicycle Facilities
- Off-Street Path Systems
- Transit Facilities

3B Streets

Streets are the most important part of Asheville's transportation system. Ideal street design must accommodate all modes of transportation (motor vehicle, bicycle, pedestrian, and transit), although there are certain street classes, such as alleys, that have specialized purposes. Residential streets should provide connectivity while discouraging high-speed cut-through traffic.

The standards in this section are required for new public and private streets constructed within the corporate limits of the City of Asheville.

3B.01 Street Types Defined

Low impact – A public or private street providing primary access in steep slope and/or ridge top areas. In addition, a low impact street may be identified as a street that is designed and constructed to minimize stormwater runoff through surface treatment and infiltration (using swales and other type of filtering and retention) or designed and constructed as access for minor subdivisions of less than 15 single family homes.

Alley - A public or private way providing secondary or service access to abutting property. All new alleys are to be privately-maintained with measures to ensure the travelway is not obstructed in any manner, including by parking.

Alternate Access - A private way providing primary access to four or fewer single family residential lots.

Local - A public or private street providing primary access to a limited number of abutting properties.

Collector- A public or private street "collecting" traffic from local streets and carrying it to arterial streets while providing primary access to abutting properties.

Arterial - A public street carrying large volumes of through traffic while providing primary access to abutting properties, which are typically developed with commercial, industrial, or multifamily residential uses.

Figure 3-1: General Street Layout

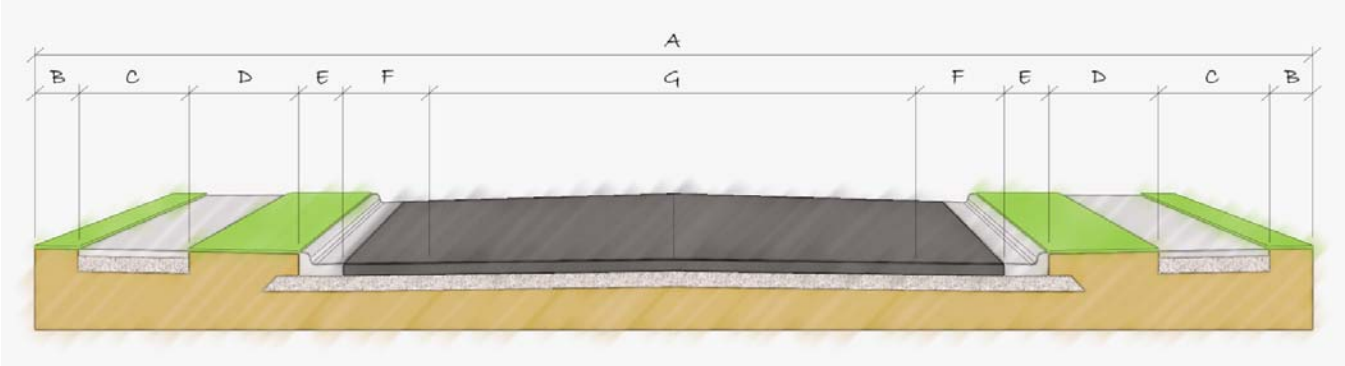

Table 3-1 : Street Width and Curbing Design Standards

Design Element	Description	Street Classification						
		Low Impact	Alley	Alternate Access	Local	Collector - Urban	Collector - Suburban	Arterial
A	Right-of-Way Width	32'-40	20'-30'	20'	50'	60', 68'-72'*	62', 70'-84'*	All Design Elements Based on Traffic Study Findings
B	Setback From Right-of-Way	N/A	N/A	N/A	1.5'	3'	1'	
C	Sidewalk Width	N/A	N/A	N/A	**	**	**	
D	Utility Strip Width	N/A	N/A	N/A	**	**	**	
E	Curb & Gutter Width	2.5	2.5'	2.5'	2.5'	2.5'	2.5'	
	Curb Type Allowed	a, b, c	a, b, c	a, b, c	a, b	b	b	
F	Bicycle Lanes	N/A	N/A	N/A	N/R	4'-6'*	4'-6'*	
G	Street Pavement Width	20'	12'-16'	12'-16'***	22'	30'-40'	30-40'	

Key:

* *The larger right-of-way width ranges for Collector-Urban (68'-72') and Collector-Suburban (70'-84') is necessary when bicycle lanes are required on one or both sides of street.*

** *See Sidewalk Design "Tables 3-18: Sidewalk, Utility Strip and Setback Dimensions for Local Streets" and "3-19: Sidewalk, Utility Strip and Setback Dimensions for Collector & Arterial Streets".*

*** *Includes horizontal portion of curb.*

Curb Types

a=Valley (see "Standard Detail 3.10a: Valley Curb Detail") - allowed when associated street grades do not exceed 5% and when consistent with existing curbing in the area

b=Vertical (see "Standard Detail 3.11: Standard Curb and Gutter" or "3.11A Standard Stand-up, Mountable & Median Curb")

c=None

Bicycle Lanes

As indicated in "Table 3:19: Sidewalk, Utility Strip and Setback Dimensions for Collector & Arterial Streets", bicycle lanes are not appropriate in all cases, and will be replaced by striped shoulders, unmarked space reservation, or other facilities at the determination of the City Engineer or his/her designee. Where there is on-street parking adjacent to bicycles parallel or back in parking is preferred.

Parking

On street parking is to be approved on a case by case basis by the City Engineer or his/her designee.

3C Streets - Geometric Design

3C.01 Composition

The right-of-way width required for new streets may include the following elements:

- The paved roadway section including travel lanes, turning and acceleration or deceleration lanes, transit lanes, bicycle lanes, and parking lanes
- Curbs and gutters or drainage swales (drainage swales must be designed in accordance with "Section 8 - Stormwater" of this manual)
- Roadside and median landscaping areas
- Sidewalks and multi-use paths
- Any necessary utility corridors

3C.02 Internal Connectivity

3C.02a Extension to Property Line. All streets shall be extended to the property lines across the property to be developed, unless the street to be constructed has been approved by the City as a cul-de-sac or other street with no outlet. Where existing rights-of-way abut property to be developed, streets shall be built to connect to rights-of-way as feasible. Future connections terminating at property line shall be signed according to the Manual on Uniform Traffic Control Devices (MUTCD). In locations where these extensions are to be constructed in the future, a cul-de-sac must be provided in accordance with the "Cul-de-Sac Street" portion in this chapter of this section. Other types of turn around may be approved by the City Engineer or his/her designee, provided they comply with current International Fire Code.

3C.03 Horizontal Alignment

3C.03a Minimum Horizontal Curve. Street curvatures shall meet the minimum specifications shown in "Table 3-2: Minimum Horizontal Street Curve Specifications".

3C.03b Superelevation shall be used on collector and arterial streets, and shall conform to current American Association of State Highway and Transportation Officials (AASHTO) and North Carolina Department of Transportation (NCDOT) standards for superelevation design.

Table 3-2: Minimum Horizontal Street Curve Specifications

Design Criteria	Local Street	Collector Street	Arterial Street
Minimum Design Speed (mph)	20	30	40
Minimum Centerline Radius (feet)	90	150	500
Minimum Reverse Curve Tangent (feet)	50	100	200
Minimum Intersection Approach Tangent (feet)	30	100	300

3C.04 Vertical Alignment

3C.04a Minimum Street Grade. All street grades shall equal or exceed the minimum street grade of 0.5 percent.

3C.04b Maximum Street Grade. Street grades typically shall not exceed the maximum street grades shown in "Table 3-3: Maximum Street Grades".

Table 3-3: Maximum Street Grades

Location	Maximum Street Grade
Local	15%*
Collector	9%
Arterial	7%
Intersection Approach (Minimum 50')	7%
Stop Sign Approach (Minimum 50')	5%
Signalized Intersection Approach (Min. 100')	5%
** Grades of 15% to 18% may be considered provided a sprinkler system is installed.*	

3C.04c Design Controls for Vertical Curves. Design control for crest and sag vertical curves should conform to the standards established in the most current edition of *A Policy on Geometric Design of Highways and Streets* published by the AASHTO. The subject standards are based on the formula L = KA where L = length of vertical curve in feet, K = rate of vertical curvature in feet per percent of A, and A = algebraic difference in grades in percent. The City of Asheville will accept the K values used by the North Carolina Department of Transportation (NCDOT) for local and collector types streets shown in Table 3-4 Vertical Curve Design Control.

Table 3-4: Vertical Curve Design Control

Street Type	Minimum Crest Length (feet)	Minimum Sag Length (feet)	Minimum Stop Length (feet)	Minimum Curve Length (feet)
Local	10A	10A	5A	80
Collector	20A	20A	9A	100
Arterial	44A	64A	-	150

3C.05 Left Turn Lanes

3C.05a Storage Length. Left turn lane storage length shall be determined based on an acceptable method approved by the City Engineer or his/her designee.

3C.05b Deceleration Length. On arterial streets, the turn lane length shall provide for deceleration in addition to storage. The minimum taper length shall be 50 feet and shall be considered part of the deceleration length.

3C.05c Tapers may be used as necessary to shift lanes laterally. Refer to "Section 6 - Public Safety" of this manual for Traffic Calming requirements. The minimum taper length is determined by the following "Table 3-5: Minimum Taper Length Equation".

Table 3-5: Minimum Taper Length Equation

Design Speed (mph)	Posted Speed (mph)	"D" Minimum Deceleration Length (feet)	"D" Desirable Deceleration Length (feet)	"T" Bay Taper Length (feet)	"A" Approach / Departure Taper Equation
30	25	100	150	75	$A = WS^2 / 60$ (40 mph or less) $A = WS$ (45 mph and greater)
35	30	100	150	75	
40	35	150	200	100	A = Length S = Design Speed W = Width of Lateral Shift
45	40	150	250	100	
50	45	150	300	100	* Storage length for waiting vehicles should be calculated based on the latest version of the *Highway Capacity Manual* or *Policy on Street and Driveway Access to North Carolina Highways*.
55	50	200	500	150	
60	55	250	575	200	

Figure 3-2: Taper Treatment for Turning Lanes

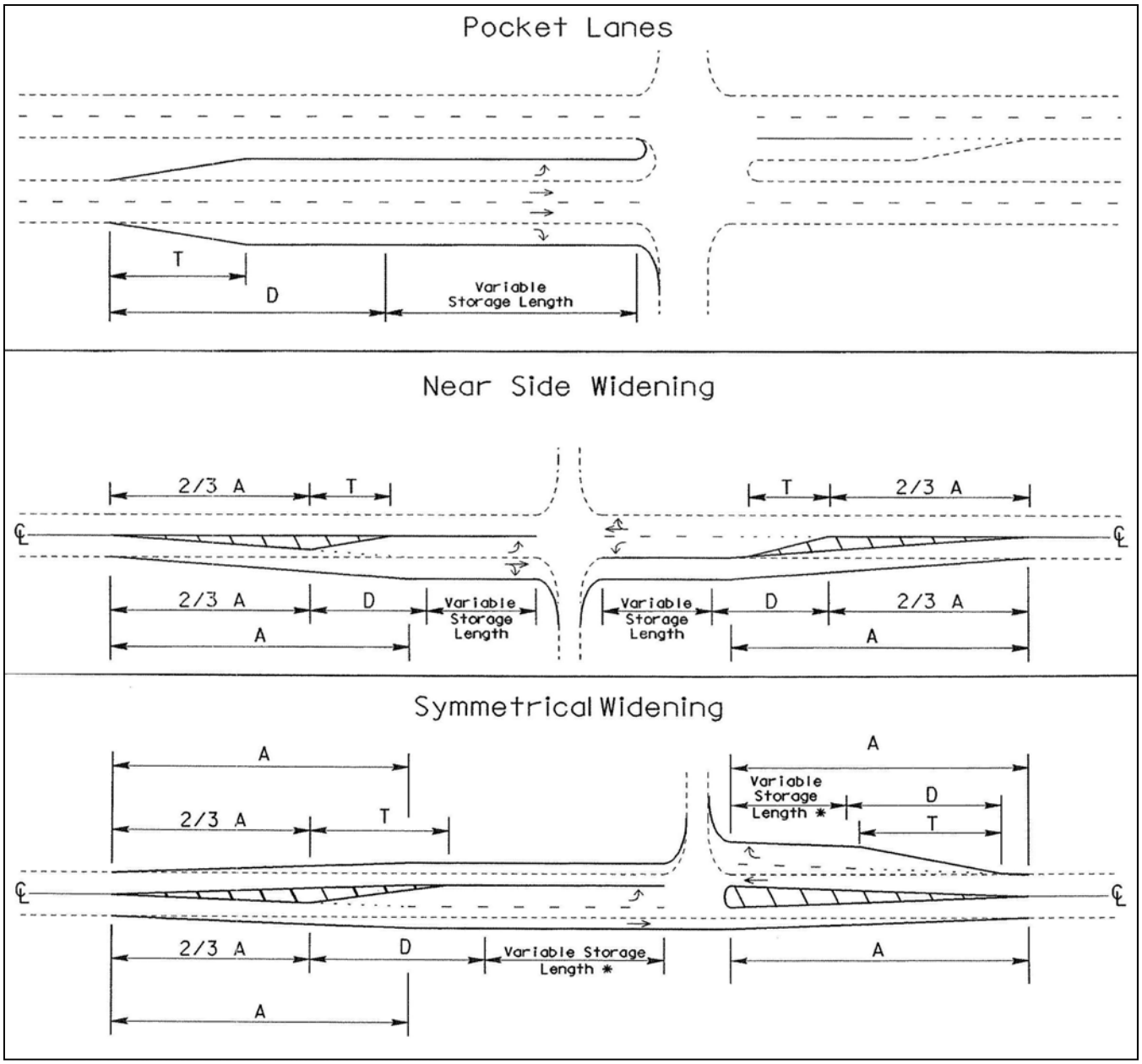

3C.06 Intersections and Street Spacing

3C.06a Angles. All streets should intersect at right angles. At no time shall a street intersect any other street at less than 75 degrees. Street intersections less than 90 degrees will be reviewed and approved on a case by case basis.

3C.06b Minimum Street Spacing. Spacing between street centerlines shall equal or exceed the minimum distances shown in "Table 3-6: Minimum Street Spacing".

Table 3-6: Minimum Street Spacing

Street Type	Minimum Street Spacing (feet)
Local	125
Collector	200
Arterial	600

3C.06c Corner Radii. The street corner radii at intersections shall have radii specifications range as shown in "Table 3-7: Intersection Radii". Larger corner radii may be used for streets serving primarily industrial uses. Property Line Triangles must be provided at intersections as shown on "Table 3-8: Minimum Intersection Property Line Triangle".

Table 3-7: Intersection Radii

Intersection Type	Street Corner Radius (feet)
Local - Local	10 – 15
Collector - Local	15 – 20
Collector - Collector	20 – 25
Arterial - Local	20 – 25
Arterial - Collector	25 – 35
Alley	10 – 15

Table 3-8: Minimum Intersection Property Line Triangle

Intersection Type	Minimum Intersection Property Line Triangle A x B (feet)*
Local - Local	10 x 10
Collector - Local	15 x 15
Collector - Collector	15 x 15
Arterial - Local	15 x 15
Arterial - Collector	20 x 20
Alley	5 x 5
**See Figure 3-4: Intersection Property Triangle*	

Figure 3-3: Intersection Property Triangle

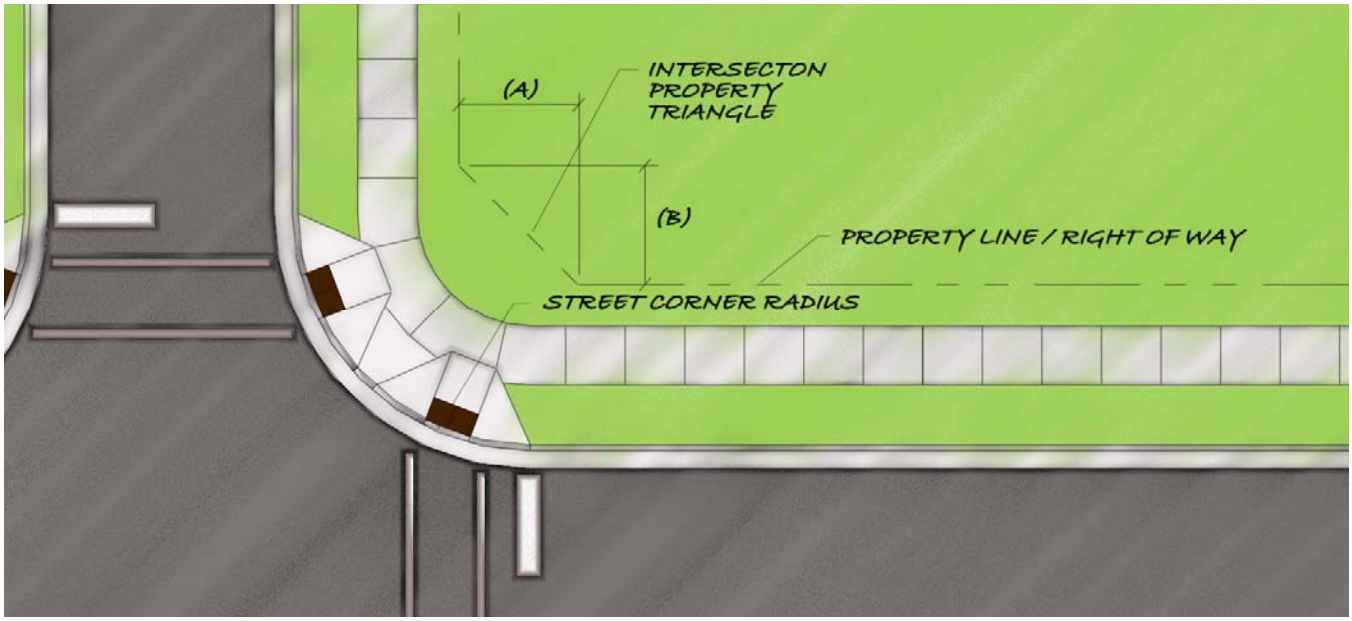

3C.07 Sight Visibility Triangles at Intersections

In order to ensure adequate sight visibility at intersections, sight visibility triangles shall be provided and maintained at all intersections with public streets, private streets, and driveway access points. Sight visibility triangles include the following dimensions:

- Generally, a sight triangle is defined as that triangle that is formed by a 10-foot side measured along the right-of-way of the minor approach beginning at its intersection with the right-of-way of the major approach and a 50-foot side measured along the right-of-way of the major approach beginning at its intersection with the right-of-way of the minor approach (Figure 3-4: Sight Visibility Triangles at Intersections). There are times when the right-of-ways are large enough to adversely affect the intent of a sight triangle making it difficult for a driver to enter the major street. The City Engineer or his/her designee will review these situations on a case-by-case basis and make any appropriate adjustments that are needed.
- For intersections formed by two public streets with a traffic sign or other traffic control device, the minor approach is defined as the street that must stop or yield.
- For intersections formed by a public street and a private street or driveway, the public street is defined as the major approach and the private street or driveway is defined as the minor approach.
- For a private street or driveway, the short side of the sight visibility triangle shall be measured along the edge of the private street or driveway.
- For a public street, private street, or driveway where the building displays a 0-foot setback, the long side of the triangle shall be measured along the face of curb ("Figure 3-5: Sight Visibility Triangles for 0-Foot Setback Conditions"), with additional measures to be applied if deemed necessary by the City Engineer or his/her designee in accordance with sound engineering principles.

On streets maintained by the NCDOT, additional sight visibility triangle requirements may be applied by that authority.

Within the sight visibility triangles identified above, and except as provided below, no structure, sign, plant, shrub, tree, berm, fence, wall, or other object of any kind or parking or storage of automobiles shall be installed, constructed, set out, or maintained so as to obstruct cross-visibility at a level between three (3) and 10 feet above the level of the center of the street intersection. These restrictions shall not apply to:

- Existing natural grades which, by reason of natural topography, rise three feet above the level of the center of the intersection;
- Trees having limbs and foliage trimmed in such manner that no limbs or foliage extend into the area between three and ten feet above the level of the intersection;
- Fire hydrants, public utility poles, street markers, governmental signs, and traffic control devices;
- Any structure, sign, plant, shrub, tree, berm, wall, or fence located in the Central Business District;
- Trees which are planted in order to meet the street tree requirement as set forth in subsection 7-11-3(f).

Figure 3-4: Sight Visibility Triangles at Intersections

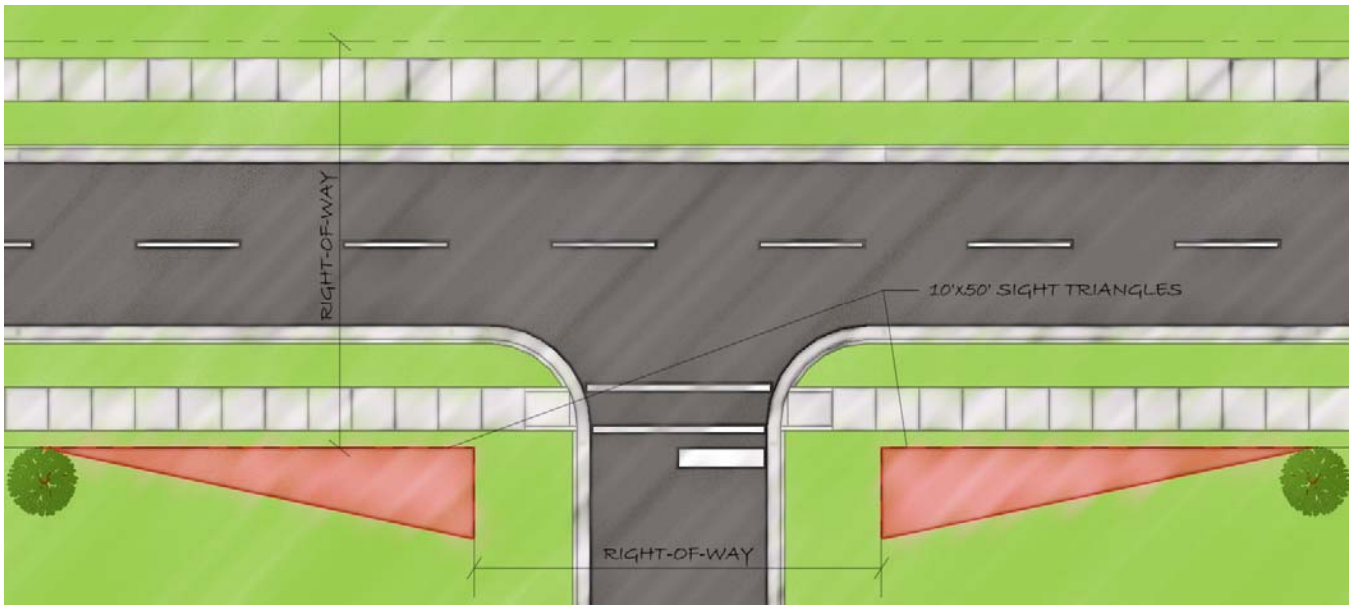

Figure 3-5: Sight Visibility Triangles for 0-Foot Setback Conditions

3C.08 Cul-de-sac Streets

Cul-de-sac streets are strongly discouraged on local and residential streets because they disrupt connectivity of streets for safety and access. Cul-de-sacs are prohibited on collector and arterial streets. The City Engineer or his/her designee and Fire Marshall may approve cul-de-sacs where there is no other possible street or driveway access to a property from a public right-of-way, or if a cul-de-sac would avoid direct access to an arterial street. Where a cul-de-sac is approved, a pedestrian/bicycle connection to adjacent development will be required, if feasible.

The length of a cul-de-sac will be measured from the last point of alternative connected access. Where approved, cul-de-sacs shall have a minimum pavement diameter (curb face to curb face) and a minimum right-of -way diameter as follows:

- **Short Cul-De-Sac.** When the total length of the cul-de-sac is 500 feet or less (measured from centerline of the intersecting street), the minimum pavement diameter is 70 feet, and the minimum right-of-way diameter is 90 feet. The small hammerhead design ("Figure 3-6: Small Hammerhead Design") may be used as an alternative.
- **Long Cul-De-Sac.** When the total length of the cul-de-sac is between 501 and 1,000 feet (measured from centerline of the intersecting street), the minimum pavement diameter is 90 feet, and the minimum right-of-way diameter is 110 feet. The large hammerhead design ("Figure 3-7: Large Hammerhead Design") may be used as an alternative. Cul-de-sacs longer than 1,000 feet must be approved by City Engineer or his/her designee and Fire Marshall.

Figure 3-6: Small Hammerhead Design

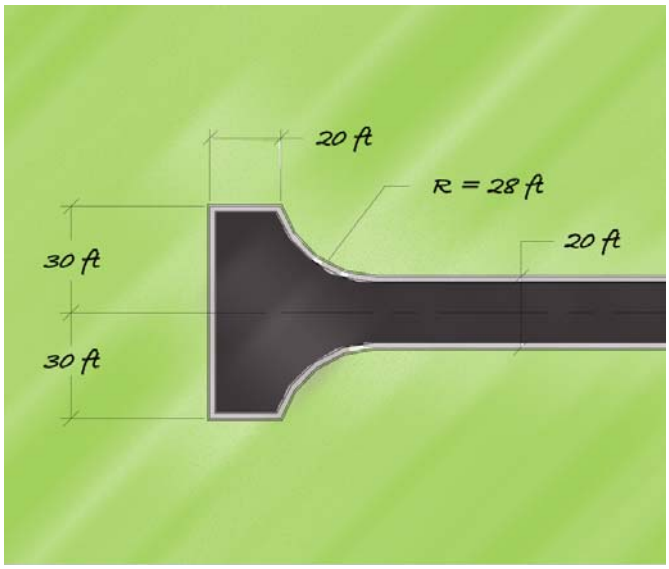

Figure 3-7: Large Hammerhead Design

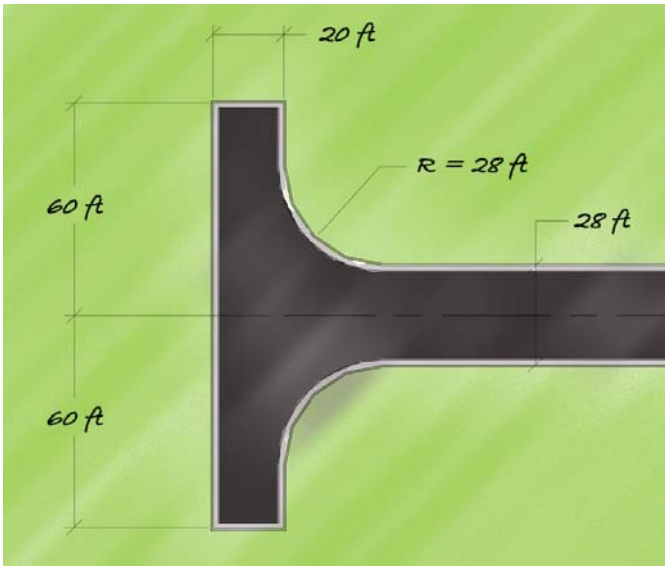

3C.09 Curb and Gutter

Curb and gutter is required for all new privately maintained and publicly maintained streets that are constructed within the city limits of Asheville. The standard curb and gutter width is 24-inch *(minimum)* or 30-inch *(*desirable*)*. 18-inch curb and gutter is ***not*** acceptable *(*18-inch curb and gutter may be used within parking lots*)*. Rolled or valley type curb may be used when the following conditions are satisfied:

- Residential streets that serve less than 20 homes.
- Catch basins must be installed every 150 feet unless stormwater calculations indicate a greater spacing to a maximum spacing of 250 feet.
- Water meter boxes must be located behind the sidewalk, if a sidewalk is required as part of the development, or at the property line.
- Street grade must be less than or equal to 5 percent.

3C.10 Granite Curb

Granite Curb is required at anytime granite curb exists prior to the work being performed in the Central Business District. Granite curb shall be installed in accordance "Standard Detail 3.11D - Granite Curb Installation".

3C.11 Curb extensions

Curb extensions or bulb outs reduce the crossing width of streets for pedestrians, make pedestrians more visible in a crosswalk, and add space to sidewalks that can be used for pedestrian amenities and activities. Forcing drivers to slow down when they turn the corner makes it safer and more comfortable for pedestrians. Also, when appropriately placed, they can improve safety and expedite the boarding of alighting of transit patrons.

Curb extensions may be required by the City Engineer or his/her designee on new local and collector streets. Curb extensions should only be used when there is a parking lane, and where transit and bicyclist will be travelling outside the curb edge for the length of the road. Curb extension design must facilitate adequate drainage.

3C.11a Curb Extension Design. Refer to the most current AASHTO guidelines for curb extension design.

3C.12 Medians

Medians are highly recommended on new streets wider than two travel lanes. Medians may be permitted on all streets subject to review and approval by the City Engineer or his/her designee. Landscaped medians shall be reviewed for appropriate vegetation types and to determine any necessary maintenance agreements. Vegetation types must be approved by City Engineer or his/her designee.

3C.12a Median Widths. In order to provide accessible pedestrian refuge locations, medians should be at least six (6) feet wide. If left turn lanes are installed in the median, the median width adjacent to the left turn storage lanes shall be four (4) feet and the median width at the start of the left turn lane bay taper shall be at least 14 feet wide. Median design widths shall conform to "Table 3-9: Median Width Design Standards".

3C.12b Design Vehicle. Streets with medians shall be designed to accommodate proper turning movements for a single unit (SU) design vehicle. AASHTO guidelines should be followed for the median design.

Table 3-9: Median Width Design Standards

Function	Minimum Width (feet)	Recommended Width (feet)
Separation of Opposing Traffic	4 feet	10 feet
Pedestrian Refuge or Traffic Control Device Location	6 feet	14 feet
Medians Separating Left Turn Lanes	14 feet	20 feet

3C.13 Vertical Clearance of Structures

At least 17 feet of vertical clearance shall be provided for all overhead structures. Vertical clearance is measured from the crown of the street to the lowest portion of the structure above all streets and alleys.

3D Streets - Sight Distance

3D.01 General

Streets shall be designed to provide adequate visibility to ensure safe operation at the appropriate design speed. Intersection sight distance and stopping sight distance must conform to the standards established in the most current edition of *A Policy On Geometric Design of Highways and Streets* published by AASHTO (tables 3-10,3 -11, 3-12 reference 2004 Policy on Geometric Design of Highways and Streets, use most current version available).

Table 3-10: Intersection Sight Distance

Design Speed (mph)	Minimum Sight Distance for Stop Signs (feet) *Note A*	Minimum Sight Distance for Left Turns from Through Street (feet) *Note B*
20	230	180
25	300	230
30	380	280
35	470	320
40	575	370
Note A: Source – 2004 Policy on Geometric Design of Highways and Streets, Exhibit 9-55, Page 661 *Note B: Source – 2004 Policy on Geometric Design of Highways and Streets, Exhibit 9-67, Page 675.*		

3D.02 Stopping Sight Distance

Table 3-11: Stopping Sight Distance

Design Speed (mph)	Stopping Sight Distance (feet)
20	115
25	155
30	200
35	250
40	305
Note: Source – 2004 Policy on Geometric Design of Highways and Streets, Exhibit 3-1, Page 112.	

Table 3-12: Stopping Sight Distance Adjustments for Grades

Design Speed (mph)	Downgrades (feet)			Upgrades (feet)		
	3%	6%	9%	3%	6%	9%
20	116	120	126	109	107	104
25	158	165	173	147	143	140
30	205	215	227	200	184	179
35	257	271	287	237	220	222
40	315	333	354	289	278	269

3D.03 Exceptions

Some objects located within street sight distance areas may not significantly obstruct the required visibility of the driver. The driver may be able to see over, under or around some objects within street sight distance areas. Objects that may exist within street sight distance areas include fire hydrants, utility poles, bus shelters and traffic control devices that are located to minimize visual obstruction. Other objects 12 inches in diameter and smaller, such as tree trunks, may be allowed within street sight distance areas if located individually or in combination so as to not substantially restrict the driver's view. The determination of what objects, if any, may be located within street sight distance areas shall be made by the City Engineer or his/her designee. Trees greater than 12 inches in diameter and located in the street right of way shall be evaluated in accordance with other applicable City policies and requirements.

3E Streets - Pavement Design and Materials

3D.01 General

Soil testing and borings shall be taken every 500 feet during construction. This frequency may be reduced to 1,000 feet when located in areas with consistent soil profiles as determined by a Registered Soil Scientist or Professional Engineer.

3E.02 Pavement Design

3E.02a Local Streets. Pavement design for local streets shall be in accordance with "Standard Detail 3.01: Standard Street Section (Suburban Collector, Urban Collector & Local)".

3E.02b Collector and Arterial Streets. Pavement design for all collector and arterial streets shall be in conformance with the specifications prepared by a North Carolina Professional Engineer. Pavement design shall be based on subgrade conditions, a 20-year design life and projected traffic loading. Subgrade conditions shall be based upon corrected soaked CBR values at 0.1 inch penetration as per ASTM D1883.

3E.02c Design Methods. Design methods which may be used consist of the Asphalt Institute, NCDOT, or AASHTO. In no case shall the pavement design be less than the minimum design as specified in "Standard Detail 3.01: Standard Street Sections (Suburban Collector, Urban Collector & Local)" and "3.02 Standard Street Sections (Alternate Access & Alley)".

3E.02d Rigid Pavement Design. Rigid pavement design shall follow either the current AASHTO Method or the Portland Cement Association Method. Pervious pavements may be approved by the City Engineer depending on the conditions of the soil, grade, or other site specifications.

3E.02e Roadway Widening. All roadway widening of less than one lane shall be in accordance with Standard Detail 3.03: Roadway Widening. All full lane roadway widening shall be in accordance with the appropriate street section.

3E.02f Bridge Design. All public or private bridges shall be designed to withstand HS-20 highway loading and conform to current NCDOT standards unless otherwise approved by the City Engineer. All bridge designs shall be properly signed and sealed by a North Carolina Professional Engineer. All new bridges must include pedestrian and bicycle facilities as recommended in this Manual.

3E.03 Pavement Materials - Streets

3E.03a Aggregate Base Course. Aggregate Base Course shall consist of an approved coarse aggregate produced in accordance with the requirements as described in the *NCDOT Standard Specifications for Roads and Structures*.

3E.03b Bituminous Binder Course. Type I 19.0B or B 25.0B or the application of both binders courses (I 19.0B on top of B 25.0B) that shall consist of a mixture of coarse and fine aggregates, asphalt cement, and shall meet the requirements of the *NCDOT Standard Specifications for Roads and Structures*. Recycled material is encouraged, provided that it meets NCDOT specifications concerning mix design and application.

3E.03c Bituminous Surface Course. Type SF 9.5A, S 9.5B, or S 9.5C shall consist of a mixture of coarse and fine aggregates, asphalt cement, and shall meet the requirements of the NCDOT Standard Specifications for Roads and Structures concerning mix design and application.

3E.03d Tack Coat: Shall be asphalt or asphalt cement and shall meet the general, material, and construction specifications of *NCDOT Standard Specifications for Roads and Structures*.

3E.03e Concrete Pavement: Shall meet *NCDOT Standard Specifications for Roads and Structures* concerning mix design and application.

3E.03f Concrete Pavers: May be used on privately maintained streets in accordance with "Standard Detail 3.04: Interlocked Concrete Paver Streets Section". The City of Asheville will not maintain decorative type paved street surfaces such as pavers or imprinted designs within public rights-of-way unless otherwise approved by the

Director of Public Works. An encroachment agreement for decorative paved or concrete surfaces is required when located within City or State rights-of-way.

3E.03i Geotextile Fabric: May be used to stabilize a roadway, subgrades, slopes, and for other uses as necessary. Prior to using this fabric, a sample and its associated engineering data shall be submitted to the City Engineer for approval. Areas stabilized with fabric shall be indicated on "as-built" drawings with the manufacturer name and type fabric indicated.

3E.04 Pavement Materials - Cul-de-Sac or Hammerhead Sections

Due to extensive wear created by turning movements of service vehicles on cul-de-sac sections, stronger pavement design is required as indicated in "Figure 3-8: Limits of Stronger Pavement Design for Cul-de-Sac" and "Standard Detail 3.08: Cul-de-Sac Dimensions" for base, binder and surface course thicknesses.

Figure 3-8: Limits of Stronger Pavement Design for Cul-de-Sac

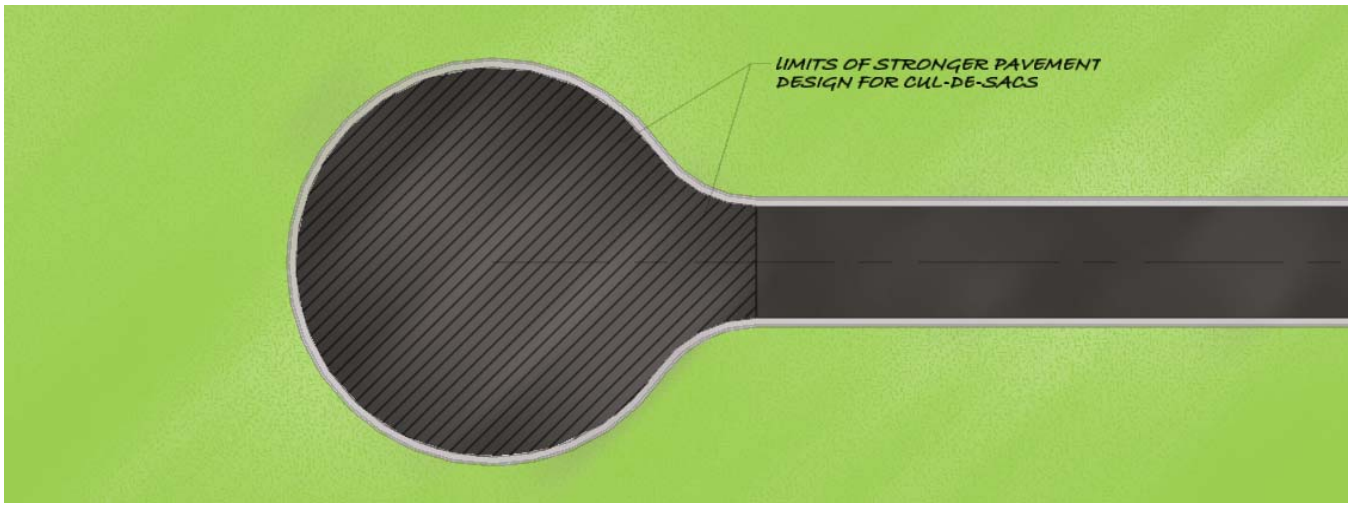

3E.05 Pavement Materials - Curbs, Gutters, Driveways, and Sidewalks

3E.05a Strength. Portland cement concrete for curb and gutter, driveways, and sidewalks shall have a minimum 28 day compressive strength of 4,000 psi, a non-vibrated slump between 2.5 and 4 inches, a minimum cement content of 564 pounds per cubic yard, an air entrainment of 5-7 %, and a maximum water-cement ratio of 0.532. The City Engineer or his/her designee may allow a plant mix with a minimum 4,000 psi with a slump over four (4)inches, provided that it is a certified pump mix. Retarders and accelerators shall be used only within the manufactures specification and must be clearly documented on the loading tickets.

3E.05b Curing. Concrete curing agents shall be free from any impurities which may be detrimental to the concrete and meet the NCDOT Standard Specifications for Roads and Structures.

3E.05c Aggregate. Aggregate for Portland cement concrete shall meet the requirements for fine and course aggregate found in the *NCDOT Standard Specifications for Roads and Structures*.

3E.05d Water. Water for mixing or curing the concrete shall be free from injurious amounts of oil, salt, acid, or other products injurious to the finished product.

3E.05e Joints. A 1/2 inch expansion joint filled with joint filler and sealer shall be placed between all rigid objects and placed no farther than 50 feet apart for sidewalks, curb, and curb and gutter, extending the full depth of the concrete with the top of the filler 1/2 inch below the finished surface. Joint materials shall be accordance

with the "Joint Materials" section of the most current *NCDOT Standard Specifications for Road Structures manual*.

3E.05a Tool Joints: Tool joints in sidewalks shall be spaced to match the width of the sidewalk but be no less than five (5) feet apart. Tool joints in curb and gutter shall be spaced every 10 feet. Tool joints shall be 3/4 inch deep and must not be sealed.

3F Parking and Loading

- The required number of parking and loading spaces for particular uses and development types is determined using the Unified Development Ordinance (UDO).
- The minimum size of a standard on-site parking space shall be 9 feet in width by 18 feet in length .
- Compact and/or tandem parking spaces may be considered on a case-by-case basis provided that the required minimum number of parking spaces as dictated by the UDO for a specific project has been satisfied (compact and/or tandem parking spaces cannot be counted towards meeting the required minimum number of parking spaces for a specific project). A written request (letter or e-mail) must be submitted stating the specific reasons for the need for compact and/or tandem parking spaces. The City Engineer or his/her designee will make the final approval as to the actual sizes of the compact and/or tandem parking spaces on a case-by-case basis using sound traffic engineering principles while balancing the needs of the developer for a specific project.
- Off-street loading/unloading spaces should have a minimum size of 250 square feet exclusive of any aisle and maneuvering space necessary to provide access.
- The City Engineer or his/her designee shall determine maneuvering space requirements for trucks using the site based on anticipated truck type/wheelbase. Sufficient maneuvering space shall be provided on-site for all projected truck movements. Minimum turning radii shall be in accordance with AASHTO Standard Turning Templates.
- Channelized automobile storage at parking lot entrances from public rights-of-way should provide channelized automobile storage space as follows in "Table 3-12: Channelized Automobile Storage Length" and shall be provided in accordance with "Figure 3-11: Channelized Automobile Storage".
- Required handicapped parking spaces should be dimensioned in accordance with "Figure 3-9: Handicapped Parking Space Dimensions".
- Reverse angle parking may be allowed by the City Engineer or his/her designee on a case by case basis.

Figure 3-9: Handicapped Parking Space Dimensions

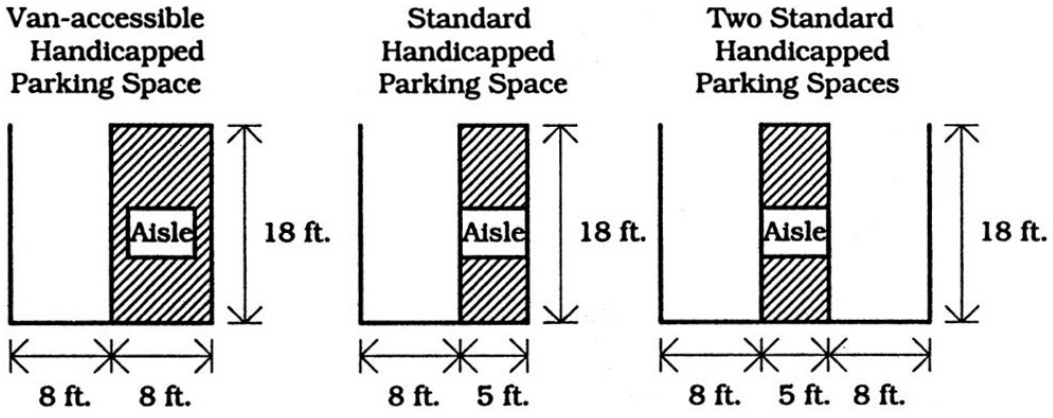

Table 3-13: Channelized Automobile Storage Length

Parking Lot Size (number of spaces)	Channelized Storage Length (feet)
less than 50	20
50 to 250	45
> 250	90

Figure 3-10: Channelized Automobile Storage

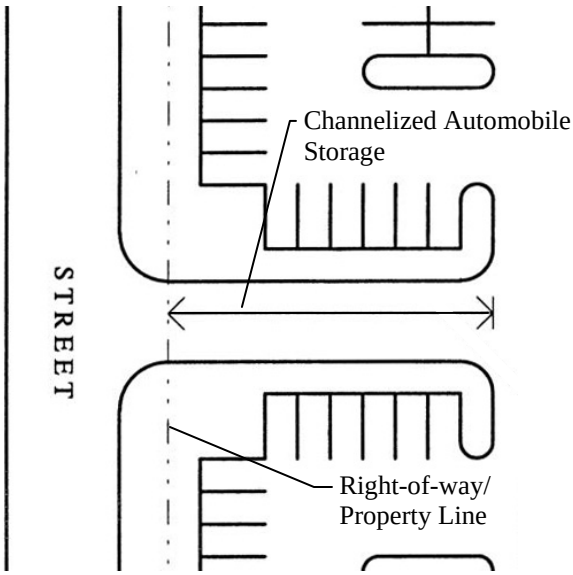

Figure 3-11: Parking Lot Space Layout

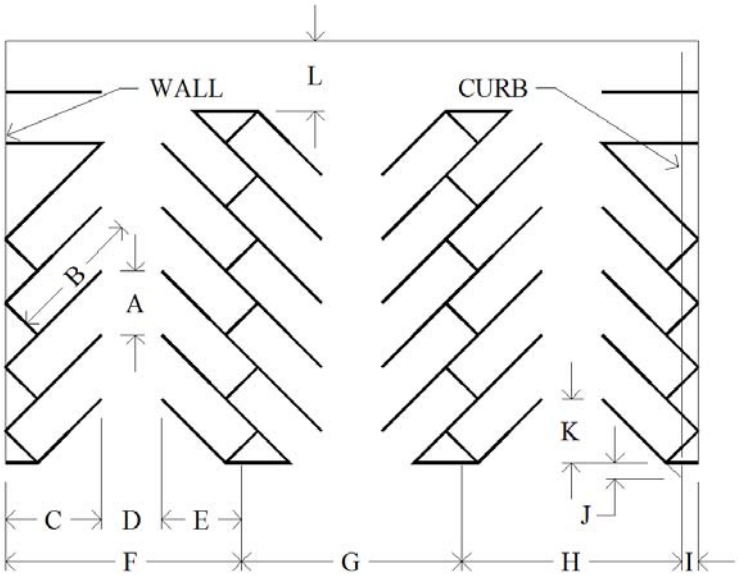

Table 3-14: Recommended Parking Lot Space Dimensions

Dimension (feet)	Dimension Description	Parking Stall Angle			
		45°	60°	75°	90°
A	Stall Width, Parallel to Aisle	21.7	10.4	9.3	9
B	Stall Length of Line	27	23.2	20.4	18
C	Stall Depth to Wall	19.1	20.1	19.7	18
D	Aisle Width Between Stall Lines	12	14	21	24
E	Stall Depth, Interlock	19.1	20.1	19.7	18
F	Module, Wall to Interlock	50.2	54.2	60.4	60
G	Module, Interlock	50.2	54.2	60.4	60
H	Module, Interlock to Curb Face	48.4	52	58	57.5
I	Bumper Overhang (Typical)	1.8	2.2	2.4	2.5
J	Offset	4.6	4	-0.3	0
K	Setback	14	9	4.7	0
L	Cross Aisle, One-Way	14	14	14	14
L	Cross Aisle, Two-Way	24	24	24	24

3G Driveways - Vehicular Site Access Management

3G.01 General

Management of vehicular site access is important for a number of reasons, including reducing conflicts between points of access and between different modes of transportation such as pedestrian and vehicular. New vehicular site access shall be designed and constructed in compliance with these standards. Redevelopment or additions

to existing developed properties as outlined in Article 11 of the UDO shall also require compliance with these standards (as amended.)

All driveways constructed or replaced on City streets and alleys require a City Driveway Permit. All driveways constructed on NCDOT streets within the City corporate jurisdiction may also require a NCDOT Driveway Permit.

3G.02 Definition of a Driveway

A driveway is a vehicular site access point intended to serve a limited number of properties. Driveways have different purposes than streets and have different design standards, including the number of driveways allowed to access an adjoining street, spacing requirements to separate driveways from other driveways and intersecting streets, sight distance, and other design requirements.

Table 3-15: Maximum Number of Driveways Allowed

Land Use	Maximum Number of Driveways Allowed Per Property For Each Adjoining Street
Single Family, Duplex or Triplex	One
All Other	Two*
** Must also meet spacing requirements of Table 3-16*	

Table 3-16: Street Minimum Spacing Requirements for Driveways

Street Classification	Minimum Spacing Requirements (feet)	Land Use Type		
		Residential - Single Family, Duplex or Triplex	Residential > 3 Units	Nonresidential Generating < 1,000 vehicle trips per day*
Local	From property line	5	10	10
	From driveway on other property	15	20	20
	From intersection	25	40	40
	From driveway on same property	Not permitted	100	`150
Collector or Arterial	From property line	5	10	10
	From driveway on other property	20	50	50
	From intersection	25	75	100
	From driveway on same property	Not permitted	100	150 for collectors; for arterials, spacing requirements shall be determined by the City Engineer or his/her designee

* For nonresidential land uses generating 1,000 or more vehicle trips per day, access spacing requirements shall be determined by the City Engineer or his/her designee after review of the traffic impact analysis required for the project. In no case shall the requirements for these uses be less restrictive than those in place for nonresidential uses generating less than 1,000 vehicle trips per day. Driveways will be allowed on local streets only if no collector or arterial access is available.

Table 3-17: Other Driveway Design Requirements

Design Element	Land Use		
	Single Family, Duplex, Triplex	**Residential >3 Units**	**Nonresidential**
Width (min-max in feet)	12-18	12-24	24-36
Curb Radii (min-max in feet)	3.5	3.5-10	3.5-10
Apron Type (See Standard Details 3.15, 3.15A, 3.15B, and 3.15C)	Standard	Standard except as follows: Street type required for developments generating 1,000 or more vehicular trips per day or where restricted turning movements are required.	Standard except as follows: Street type required for industrial developments, developments generating 1,000 or more vehicular trips per day or those having frequent large truck access, or where restricted turning movements are required.
Vehicle Storage	N/A	25 feet, except 75 feet at signalized intersections.	25 feet, except 75 feet at signalized intersections.
Internal Circulation	N/A	Required when adjoining multifamily-zoned property unless precluded by topography.	Required when adjoining nonresidentially-zoned property unless precluded by topography.
Shared Driveways	Encouraged	Encouraged	Encouraged
General	N/A	Alignment – 90-degree intersection with streets is required. Driveways on arterials and collectors should be aligned with other driveways and intersections on the opposite side of the adjoining street, however, if this is not feasible or desirable for access management, off-set requirements from accesses on opposite sides of collectors and arterials are 150 feet and 300 feet, respectively. MUTCD-compliant signage and markings shall be provided. All pavement markings shall be thermoplastic. Internal traffic movement design shall prohibit backing onto streets except for single family residential uses accessing local streets.	

3H Multimodal Design Standards - Sidewalks

3H.01 General

Sidewalks are the most critical component of an urban area's pedestrian transportation network. While this network can be augmented by greenways and multipurpose trails, most pedestrian traffic in a city will occur on sidewalks, particularly those along streets and within developments. The City of Asheville requires sidewalks to be installed along existing or new roadways when property is developed or redeveloped as defined in the UDO (Chapter 7, Article 11).

The City of Asheville is committed to providing infrastructure within the public right-of-way that is accessible for all users. The City recognizes that this goal might be difficult to achieve in all cases because of existing terrain conditions, restricted right-of-way, and even existing City ordinances; however, the City will constantly strive to meet the goal.

3H.02 Sidewalk Requirements on New Streets

3H.02a Sidewalks on Both Sides of a New Street. Sidewalks are required to be installed on both sides of a new street under any of the following conditions:

- The new street's width from face of curb to face of curb exceeds 30 feet.
- The new street's projected average daily traffic exceeds 1,000 vehicles per day.

- The street is within one-half mile, measured along the centerline of public right-of-way, of a school, public park, library, community center, transit route, or any other pedestrian generation point as identified by the City Engineer or his/her designee.
- Either side of the street is zoned Central Business District, Urban Place District, Neighborhood Corridor District, Urban Village District, Urban Residential District, or their successors.

3H.02b Sidewalks on One Side of a New Street. Sidewalks are required to be installed on at least one side of all new streets with daily traffic volumes of 300 vehicles per day or more. The daily traffic volumes will be the current or projected volumes within a five year time period and will include traffic generated from an applicable project. When a sidewalk is only required on one side of the street, grading for a future sidewalk on the other side of the street will be provided. Utility poles shall not be located in the sidewalk or future sidewalk location on new streets.

3H.03 Sidewalk Requirements on Existing Streets

Sidewalks shall be constructed to current standards along adjacent existing public or private streets for all new developments, redevelopment, and expansions of existing developments. Projects that generate less than 100 vehicles per day are exempt from this requirement (unless a new street is constructed).

3H.03a New sidewalks. Sidewalks shall be constructed in conformance with the design standards for sidewalks, If the sidewalk cannot be contained within the existing right-of-way, a recorded easement or right-of-way must be dedicated to the City of Asheville.

3H.03b Renovated sidewalks. Existing sidewalks adjacent to the development shall be brought into compliance with current standards, including ADA requirements, crossing ramps, driveway apron crossings and for obstructions. This compliance does not include upkeep or maintenance of existing sidewalks.

3H.04 Sidewalk Fee-in-Lieu of Construction

Information regarding sidewalk fee-in-lieu-of construction is located in Section 7-11-8 (Sidewalk Requirements) of the City of Asheville 's Unified Development Ordinance (UDO).

3H.05 Sidewalk Design Standards

Sidewalks shall be designed to meet the following standards:

Figure 3-12: Sidewalk Design Elements (Same as Figure 3-1: General Street Layout)

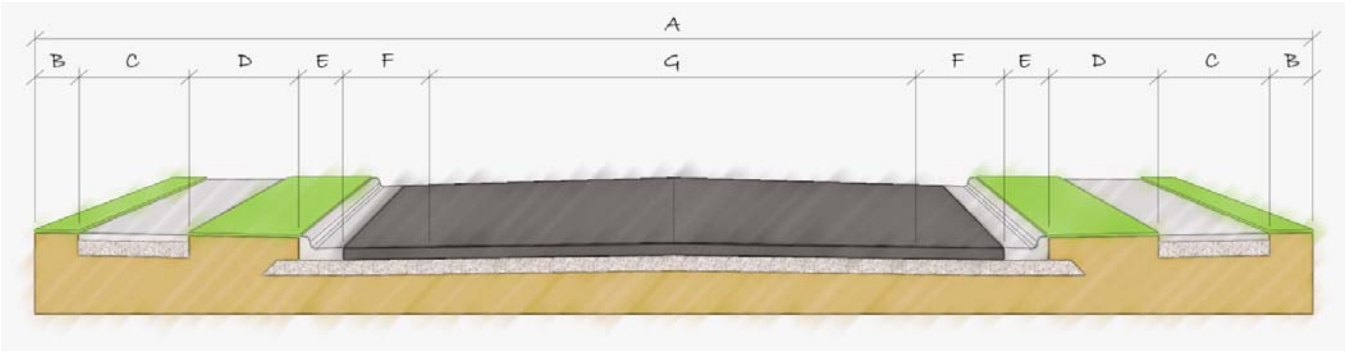

Table 3-18: Sidewalk, Planting Strip and Setback Dimensions for Local Streets

Element	Description	Width
B	Setback from right-of-way	1.5 foot
C	Sidewalk or sidewalk easement	5 feet ***
D	Utility strip/setback from street or curb edge	5 feet ***

Table 3-19: Sidewalk, Planting Strip and Setback Dimensions for Collector & Arterial Streets

Element	Description	Width	
		Suburban*	Urban**
B	Setback from right-of-way	0.5 foot	2.5 feet
C	Sidewalk	5 feet***	10 feet minimum 12 feet recommended
D	Utility strip/setback from street or curb edge	8 feet***	0 feet or as specified in the applicable zoning district

* All zoning districts except those listed under ** below
** CBD, Neighborhood Corridor, Urban Place, Urban Residential, Urban Village
*** where topography makes providing a planting strip infeasible, a sidewalk constructed at back-of-curb may be approved by the City Engineer or his/her designee; such sidewalks shall be a minimum of 6 feet in width with a desirable minimum of 8 feet in width along collector and arterial streets.

3H.05a Obstacles in Sidewalk. Obstacles, such as utility poles or cabinets, sign posts, planters, trees, water meters, water valves, fire hydrants, or grates with openings larger than 1/2 inch, shall not be placed within the pedestrian access route (PAR) in newly constructed sidewalks or existing, unless approved by the City Engineer or his/her designee. The PAR must be constructed free of all obstacles.

3H.05b Meander. A sidewalk may be constructed so as to provide a gradual meander and to facilitate the installation of landscape material or to avoid obstacles such as fire hydrants or utility poles. The design of the sidewalk shall be such that the safety and usability of the sidewalk is not affected. In no case shall the taper of the sidewalk with respect to the street exceed 5:1, nor shall the distance of the sidewalk from the street exceed 20 feet.

3H.05c Vertical Grade. The vertical grade of a sidewalk shall not exceed five (5) percent, a ratio of 20 feet horizontal to 1 foot vertical (20:1), unless the grade of the adjoining street exceeds this amount. In this case, at no point will the grade of the sidewalk be permitted to exceed the grade of the adjacent street.

3H.05d Cross Slope. The cross slope of the walkway of a pedestrian access route shall be 2 percent maximum.

3H.05e Accommodation of Transit. Refer to the "Multimodal Design Standards - Transit Facilities" subsection in this section of this manual for sidewalk locations adjacent to transit stops or transfer points.

3H.05f ADA Ramps. Where sidewalks or greenways intersect any section of curb or street section, an ADA ramp will be installed. ADA ramps can be perpendicular as shown in "Figure 3-13: ADA Sidewalk Ramps" and in accordance with "Standard Detail 3.17: Standard Wheel Chair Ramps". Also, parallel and blended transitions can be used. If a matching ADA ramp does not already exist, one must be installed to avoid "trapping" the wheelchair operator in the street.

Figure 3-13: ADA Sidewalk Ramps

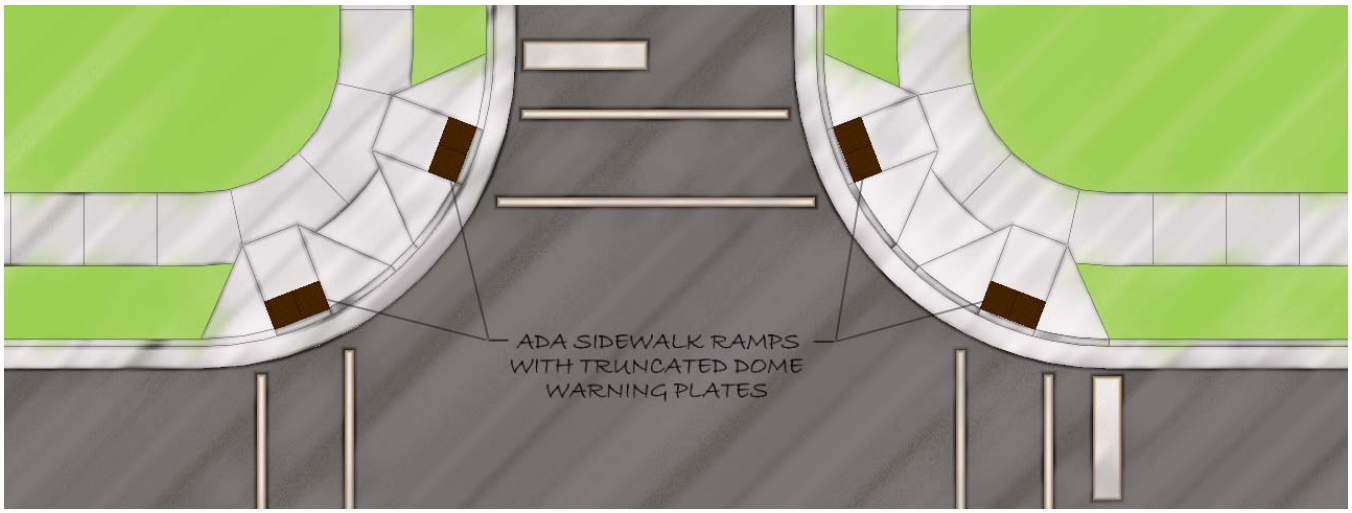

3H.05g Detectable Warning. Should be installed per "Standard Detail 3.17: Standard Wheel Chair Ramps" and "Figure 3-14: ADA Sidewalk Ramp Cross Section" at street crossings.

Figure 3-14: ADA Sidewalk Ramp Cross Section

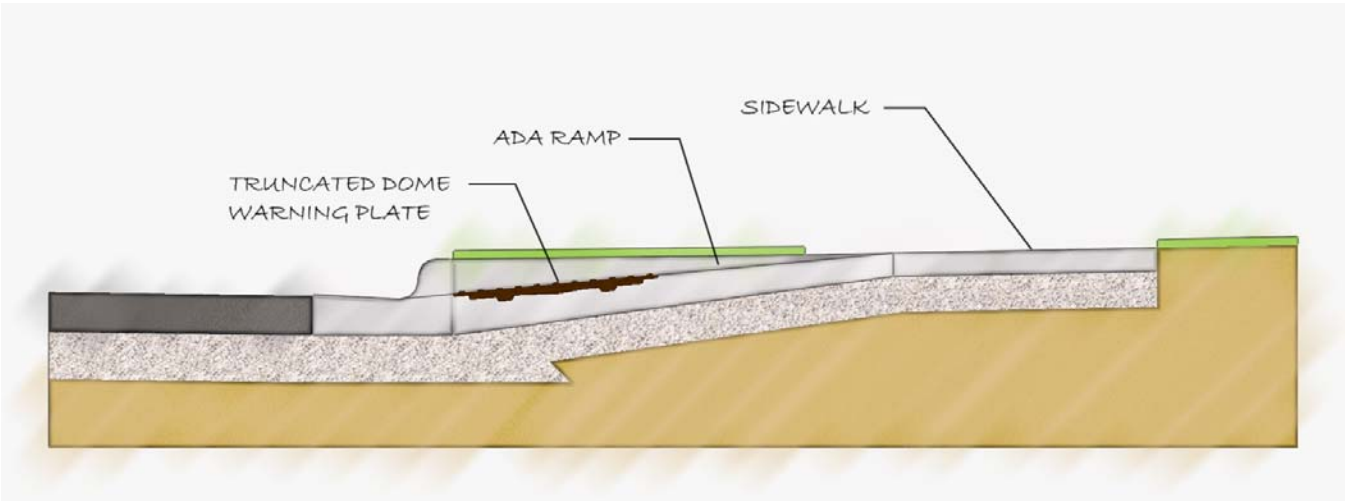

3H.05h Materials, Thickness, Joints, and Finish. All sidewalks and curbing shall be constructed of 4,000 psi concrete in accordance with "Standard Detail 3.16: Standard Concrete Sidewalk". In certain districts other materials may be required in accordance with City codes. Materials not meeting ADA requirements are not

allowed. The minimum concrete thickness of a sidewalk shall be four (4) inches. At locations where a driveway crosses a sidewalk, a six (6) inch concrete thickness is required. A 1/2 inch expansion joint filled with joint filler and sealer shall be placed between all rigid objects and placed no farther than 50 feet apart for sidewalks extending the full depth of the concrete with the top of the filler 1/2 inch below the finished surface. Joint filler shall be a material conforming to the most current *NCDOT Standard Specifications for Road Structures manual*. Tool joints shall be spaced to match the width of the sidewalk but be no less than five (5) feet apart. Tool joints shall be 3/4 inch deep and must not be sealed. The sidewalk surface shall have a broom finish in a transverse direction to pedestrian traffic.

3H.05i Running Bond Pattern. Sidewalks within the central business district shall be constructed with a running bond pattern in accordance sidewalk detail "Standard Detail 3.16B: Standard Concrete Sidewalk with Running Bond Pattern".

3H.05j Drainage. Sidewalks shall have a uniform slope toward the roadway of a maximum of 2 percent unless otherwise specified. The planting strip between the sidewalk and the back of curb shall not be less than 1/4 inch per foot nor greater than 1/2 inch per foot toward the roadway unless approved by the City Engineer. Pipes, drains, flumes, or other concentrated stormwater devices shall not discharge across a sidewalk, but shall be piped or flumed under the sidewalk.

3H.05k Sidewalk Drop-off. An adjacent slope steeper than 12:1 (8.33 percent) with a drop-off greater than 30 inches between the top of slope and bottom of slope other than curb and gutter, shall be equipped with a Public Safety Railing in accordance with "Standard Detail 3.35: Pedestrian Safety Railing".

3H.05l Curbing. Where no curb exists on a street that requires sidewalks, curb or curb and gutter installation may be required in addition to construction of the sidewalk.

3H.05m Tree Planting. When tree or tree replacement planting is required in new or existing sidewalks that are located within certain urban zoning districts, trees shall be planted in accordance with tree pit details "Standard Detail 3.22: Reinforced Concrete Sidewalk, 3.22A: Structural Soil, 3.22B: Silva Cell, 3.22C: Large Tree Grate with Washed Stone Border, or 3.22D Standard Tree Grate with Washed Stone Border". Tree planting shall be covered with a frame and grate as per "Standard Detail 3.22E: Sidewalk Tree Grate & Frame" that is flush the sidewalk's elevation and slope. The center of the tree planting shall not be located within the PAR of the sidewalk.

3I Traffic Signals.

3I.01 General

The City of Asheville follows the criteria set forth in the current MUTCD to determine if a traffic signal is warranted, and, if warranted, the City of Asheville makes the final determination regarding the installation of a traffic signal at a specific intersection along city-maintained streets. The City of Asheville reserves the right to install warranted traffic signals as a part of approved development projects when they are completed and open for business. A developer might want the installation and full operation of a traffic signal to and from promote easier and safer ingress and egress to the approved development project both on-site and off-site at an earlier date than the City would normally schedule and be willing to fund. The developer may purchase and install the traffic control signal hardware, meeting the specifications of the City of Asheville. The developer shall release, give or donate the traffic signal to the City of Asheville and shall retain no rights or ownership of personal property therein. All traffic signal installations along city-maintained streets must be approved by the City Engineer or his/her designee prior to installation. The NCDOT might require require developer funding of any

warranted traffic signal modifications and/or installations on state-maintained streets within the corporate limits of Asheville. The Developer/Owner must donate easements for traffic signal installations as required by the City of Asheville or NCDOT.

Pedestrian signals and/or emergency vehicle pre-emption will be considered on a case-by-case basis and will generally be included provided the appropriate infrastructure is in place or will be provided with the proposed traffic signal installation. Typically, emergency vehicle pre-emption will be provided along primary emergency routes.

Generally, signalized intersections along arterial or collector streets should not be spaced more closely than quarter-mile intervals. Where the signal warrants justify installation at closer spacing, access management (i.e., channelization or frontage streets) should be considered.

3J Multimodal Design Standards - Bicycle Facilities

3J.01 On-Street Bicycle Facilities

On street bicycle facilities may include a range of design treatments, such as bicycle lanes, striped shoulders, shared lane markings (sharrows), and shared road markings. Bicycle facilities will be provided in accordance with "Table 3-20: Design Standards for On-Street Bicycle Facilities" when an existing street is widened or a new public or private street is proposed and is expected to have more than 1,500 vehicles per day or is identified for a bicycle facility in the currently adopted Asheville Bicycle Plan.

Table 3-20: Design Standards for On-Street Bicycle Facilities

Street Type	Bicycle Facility
Alley, Alternate Access	Not Required
Local	Shared Roadway Marking
Collector	Bicycle lanes or striped paved shoulders*
Arterial	Bicycle lanes or striped paved shoulders with intersection treatments*
Designated Gateway	Bicycle lanes or striped paved shoulders with intersection treatments*
**Striped paved shoulders should not be marked as bicycle lanes in areas with heavy traffic, high speeds, and many driveways. Marking a bicycle lane is at the discretion of the City Engineer or his/her designee or in accordance with the adopted bicycle plan.*	

3J.01a Bicycle Lanes. A bicycle lane is a portion of the roadway that has been designated by pavement markings and signs for the preferential or exclusive use of bicyclists. Bicycle lanes should be located on both sides of the street (except on one way streets), and carry bicyclists in the same direction as adjacent motor vehicle traffic. On new or widened local streets, the minimum width for bicycle lanes is four (4) feet, excluding two (2) feet gutter. On collector and arterial streets, seven (7) feet is the preferred width, excluding gutter width. On roadways with posted speed limits of 35 MPH or under with adjacent on-street parking, the minimum width for the bicycle lane is five (5) feet. On roadways with posted speed limits of more than 35 MPH with adjacent on-street parking, the minimum width for the bicycle lane is six (6) feet. When there is on-street parking adjacent to bicycle lanes, parallel parking is preferred and should be at least eight (8) feet wide. Bicycle lanes will include marking and signage as in the current version of the MUTCD and as approved by the City Engineer or his/her designee .

Figure 3-15: Typical Bicycle Lanes

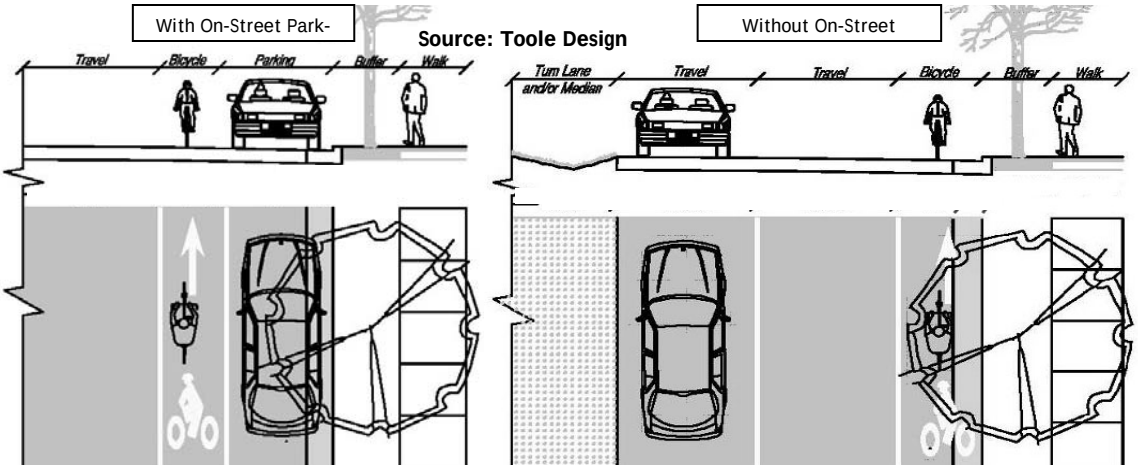

Figure 3-16: Bike Lane Striping Next to On-Street Parking

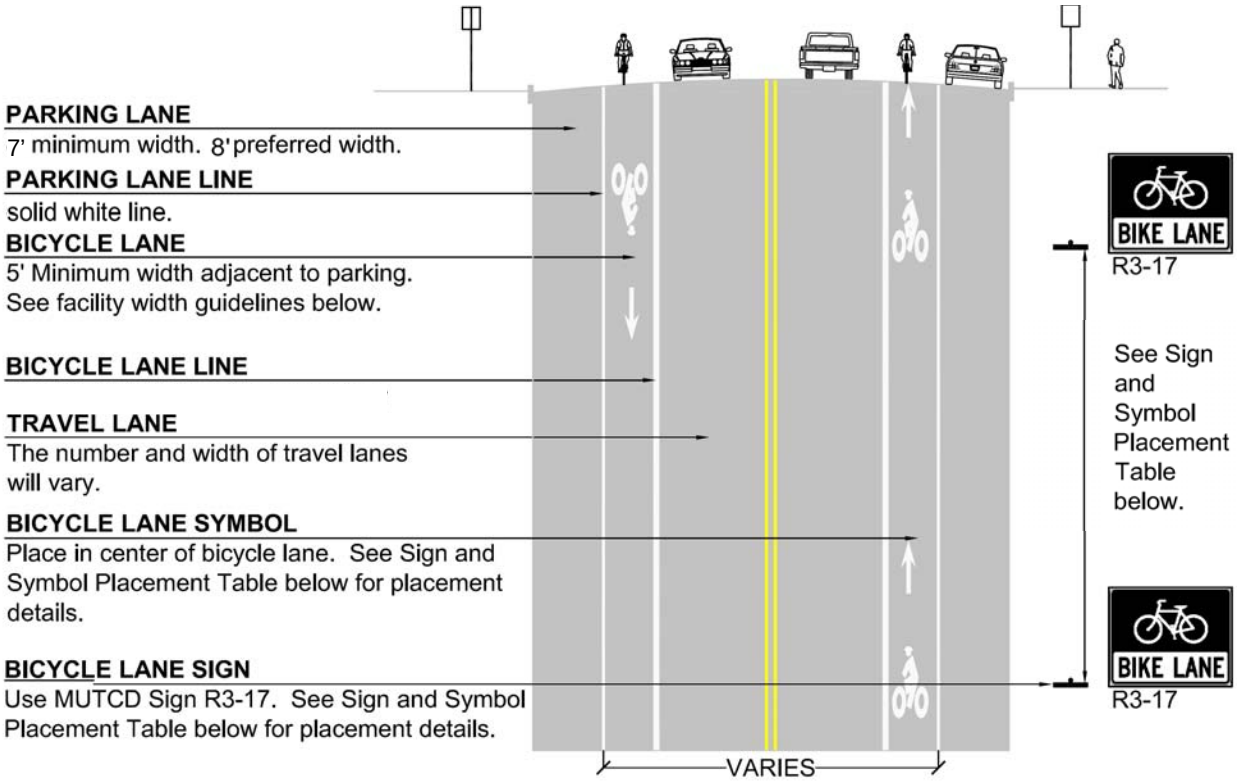

FACILITY WIDTH GUIDELINES

OPERATING SPEED	VOLUME RANGE	BICYCLE LANE WIDTH
≤35 MPH	<10,000 ADT	5 FEET
36-45 MPH	10,000-20,000 ADT	5-6 FEET
>45 MPH	>20,000 ADT	6 FEET

SIGN AND SYMBOL PLACEMENT

	SIGN SPACING	SYMBOL SPACING
RURAL	1-3 MILES	0.5-1 MILES
SUBURBAN	0.5-1 MILES	0.1-0.5 MILES
URBAN*	VARIES[1]	2-4 PER BLOCK

DESIGN OF LANES ON CLOSED SECTION ROADWAYS WITH PARKING

In areas where parking violations frequently occur, the use of the R7-9 NO PARKING/BIKE LANE sign may be used in place of the NO PARKING

* In urban areas, the use of bike lane signs should be kept to a minimum. Generally a sign may be utilized at the beginning and end of a bike lane.

3J.01b Shared Roadways. Shared roadways are streets and roads where bicyclists can be served by sharing the travel lanes with motor vehicles. Usually, these are streets with low traffic volumes and/or low motor vehicle speeds, which do not need additional width in order to be bicycle-friendly. Shared roadways with speeds of greater than 20 mph or over 1,500 vehicles per day may require "Share the Road" signage, at the discretion of the City Engineer or his/her designee.

Motor vehicle/bicycle sharing of the travel space can be emphasized by using special shared roadway pavement markings called shared lane markings (sharrows). Shared lane markings can be helpful on multi-lane streets where there is insufficient space to add bicycle lanes. Shared lane markings are encouraged on local and collector streets but are not permitted on arterial roadways. Any use of sharrows must be approved by the City Engineer or his/her designee prior to installation.

Figure 3-17: Share the Roadway Signs and Shared Lane Pavement Marking

Figure 3-18: Example Shared Lane Marking Placement

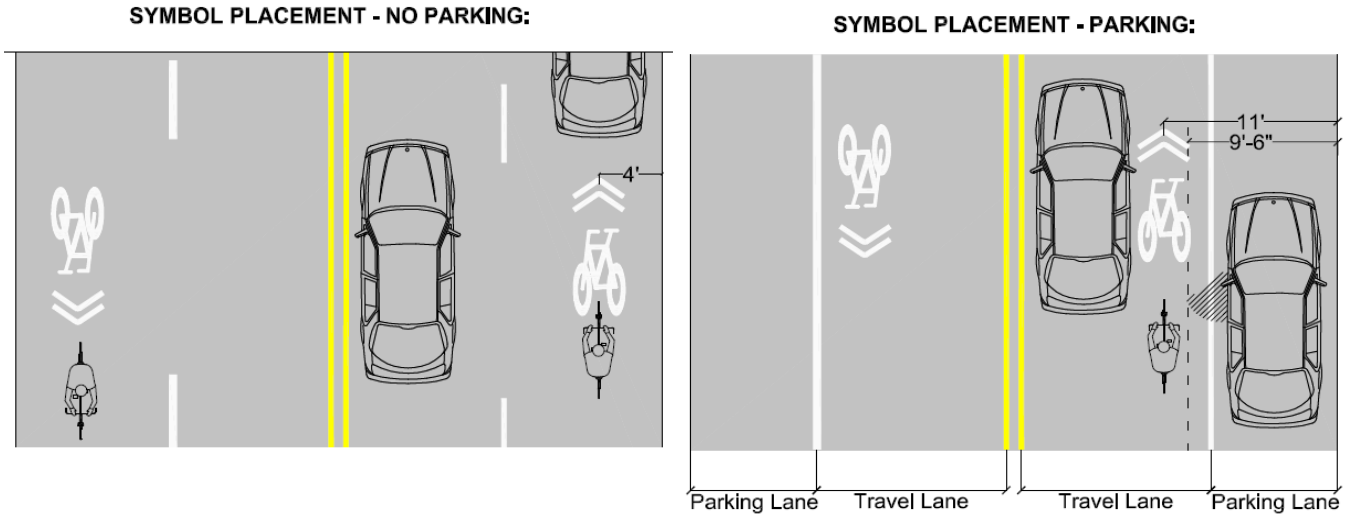

3J.01c Climbing Lanes. A bicycle lane on one side of the road (climbing lane) can provide additional space for riders climbing a hill. This type of marking can be used at the discretion of the City Engineer or his/her designee where topography limits road width and supports the usefulness of the facility. The width of the climbing lane will be the same as a bicycle lane and will normally require sharrows on the downhill side street.

Figure 3-19: Examples of Climbing Lanes

3J.01d Paved Striped Shoulders. Paved striped shoulders can provide bicyclists with extra riding space to increase their comfort when traveling adjacent to motor vehicle traffic.

3J.01e Complex Intersections. Designated movement lanes will be routed in accordance with the guidance in the current MUTCD, or other design guidelines acceptable to the City Engineer or his/her designee.

Figure 3-20: Complex Intersection

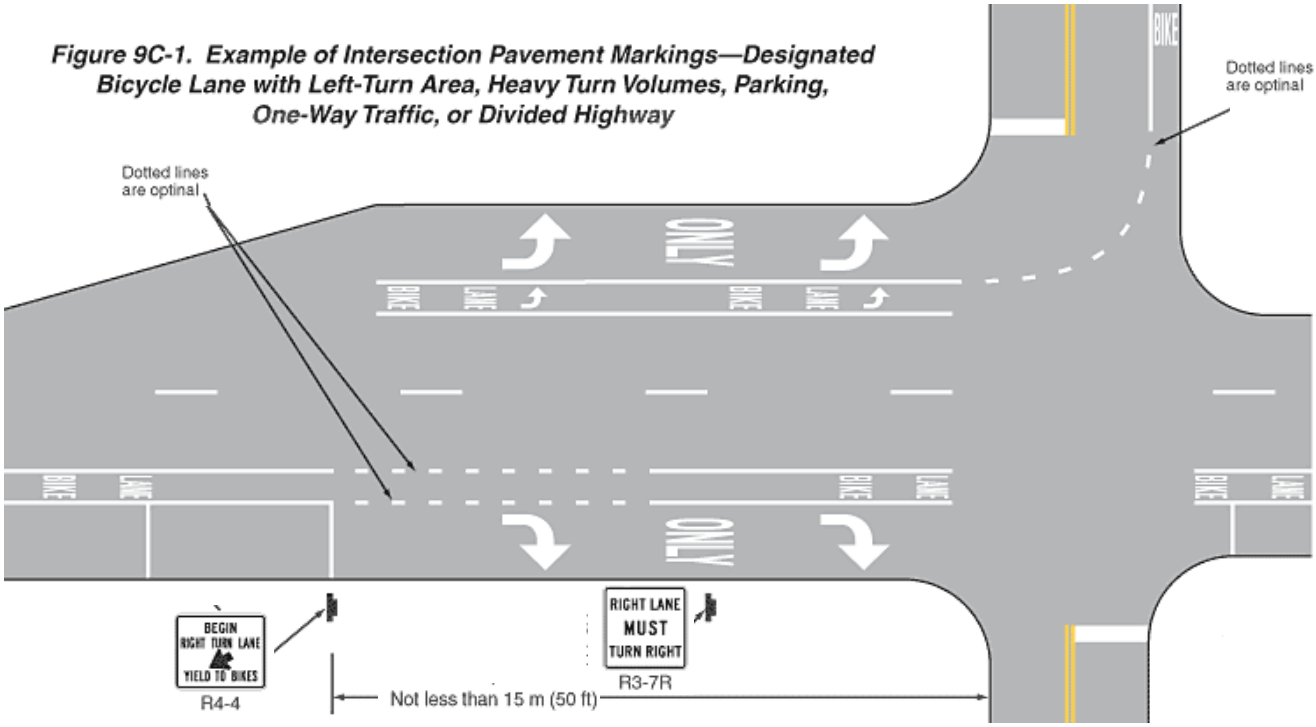

3J.02 Off Street Bicycle Facilities

Off-street bicycle facilities shall be constructed in accordance with the design guidelines established in the "Guide for the Development of Bicycle Facilities" prepared by AASHTO. Off-street bicycle facilities will be located in a dedicated right-of-way or easement having a minimum width of 20 feet and consist of an asphalt or concrete paved path at least 10 feet in width. All curves shall be designed with a minimum inside radius of 15 feet.

3J.02a Bicycle Parking. Bicycle parking can be provided in the form of bike racks and bike lockers. On-site bicycle parking should generally be provided within 50 feet of the main building and employee entrances in visible and prominent locations that are lit and physically separated from automobile parking to prevent vehicles from intruding into the bike parking area. On-site bicycle parking may be provided using the "A," inverted "U," or post and loop rack elements installed on no less than 30 inch centers, or with other style racks or lockers of a design that meets the recommendations of the Association of Pedestrian and Bicycle Professionals current Bicycle Parking Guidelines.

Bike racks should have the following features:

- Securely support the bicycle upright by its frame in at least two places.
- Prevent the wheel of the bicycle from tipping over.
- Allow head-in or back-in parking.
- Allow the frame and one wheel to be locked to the rack with a standard high security, U-shaped shackle lock.
- Support bicycles without a diamond-shaped frame and horizontal top tube.
- Resist rust or other surface changes that could damage bicycles.
- Resist being cut or detached using common hand tools, such as bolt cutters, pipe cutters, wrenches, and pry bars.
- Be anchored in a way so that it cannot be stolen with bikes attached.
- Provide at least a 2 foot by 6 foot parking space for each bike without the need to lift the handlebars of one bike over those of another to park.
- Provide easy, independent bike access.
- Be uncomplicated and intuitively simple for the bicyclist to use.
- Not present a tripping hazard for visually impaired individuals.

Comb, toast, schoolyard, and other racks that provide no support for the bicycle frame do not meet these standards. Wave style racks, unless installed to serve only two bicycles per rack element, do not provide support in at least two places, and do not meet the standard.

Figure 3-21: Examples of Acceptable Bicycle Rack Design

Figure 3-22: Examples of Unacceptable Bicycle Rack Design

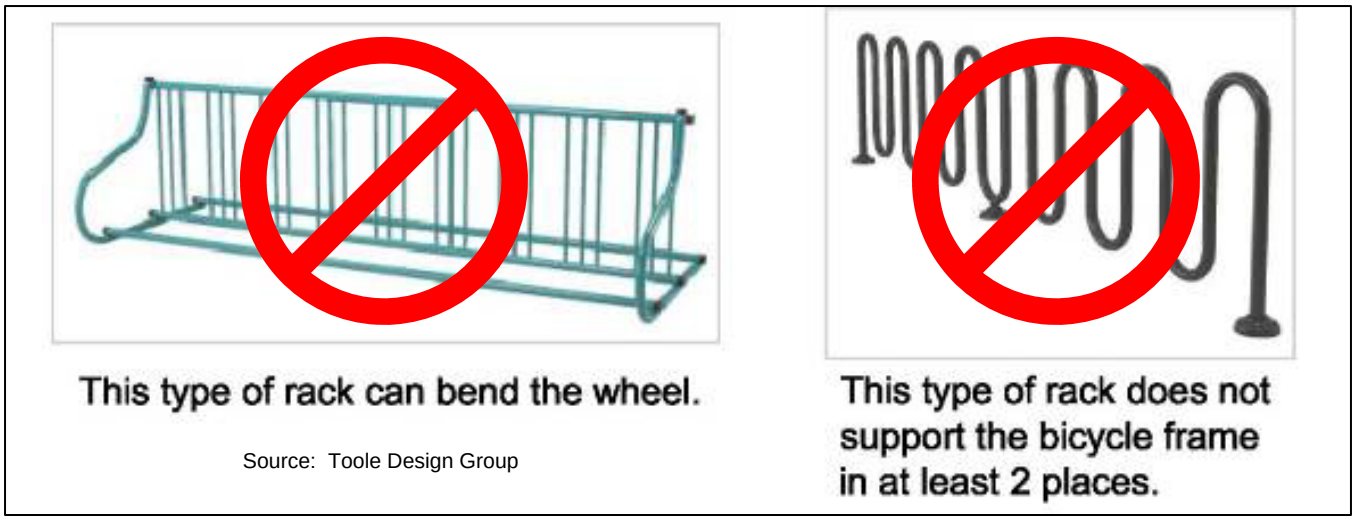

Figure 3-23: Minimum Recommended Distances Between Rack Elements

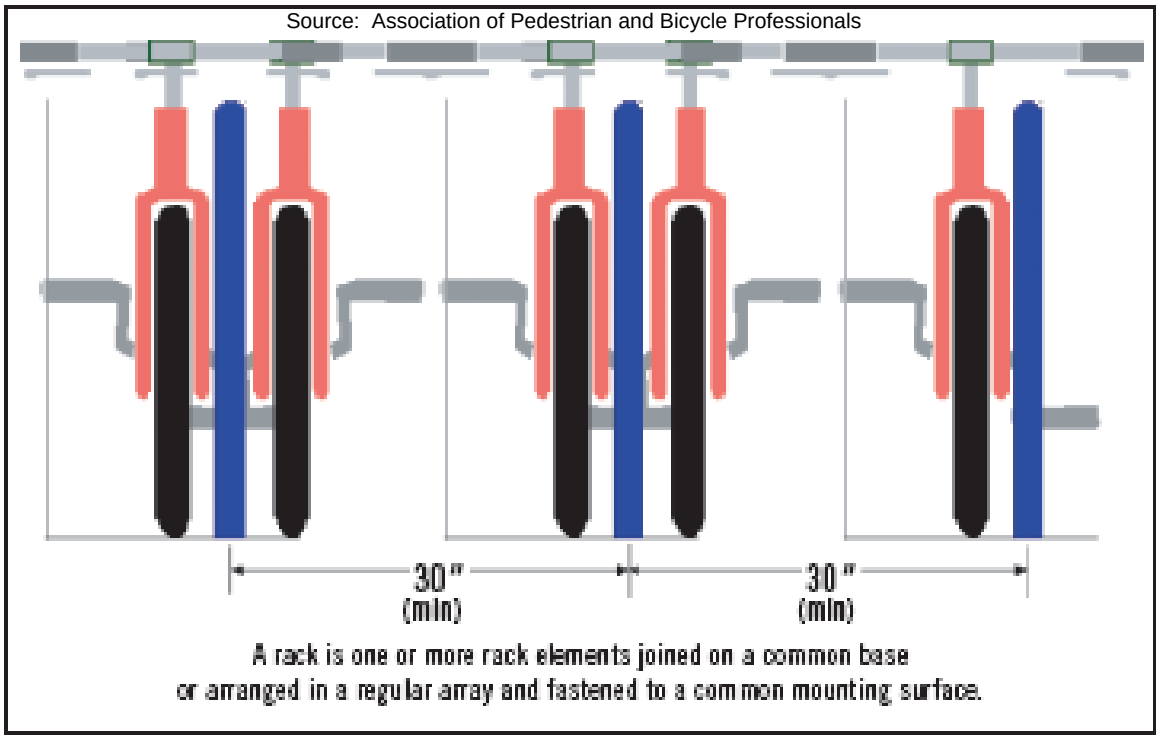

Figure 3-24: Minimum Recommended Distances Between Rack Elements (continued)

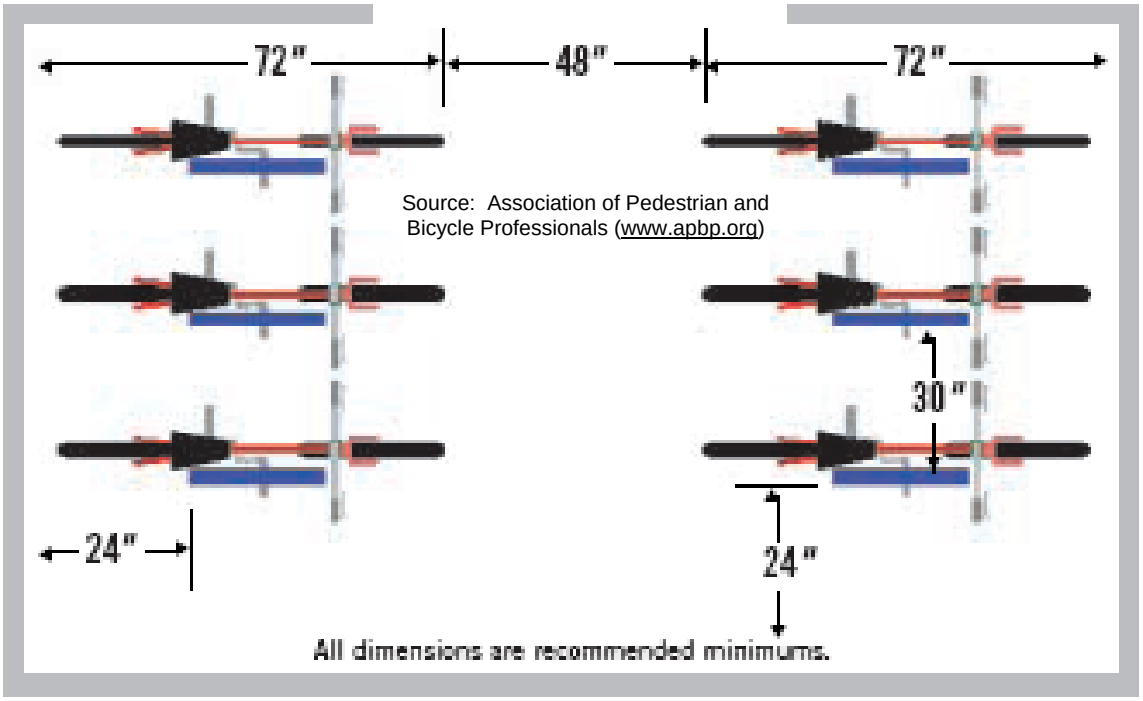

The rack area is a bicycle parking lot where racks are separated by aisles.

3J.02b Bridges. Bridges must provide for bicycle facilities in the same way as the adjacent streets. Bridge surfaces shall not be of a material or design that presents a danger to bicyclists. Railings on bridges will be at least 54 inches high. See "NCDOT Bicycle Facilities Planning and Design Guidelines" for details.

3J.02c Railroad Crossings. Railroad tracks crossing the road can present a dangerous condition for bicyclists. At diagonal at-grade crossings, the bicycle lane or shoulder should be designed to enable the bicyclist to approach the track at an angle closer to 90 degrees (but not less than 60 degrees) without having to swerve into motor vehicle travel lanes.

The width and the dimensions of the widened area will be dependent upon the skew of the railroad tracks relative to the bicyclist crossing point. It is important that the bicyclist is given sufficient space on the approach and the departure of the crossing to safely transition back to the travel way. An example of this widening treatment is shown in "Figure 3-24: Railroad Crossing".

Figure 3-24: Railroad Crossing

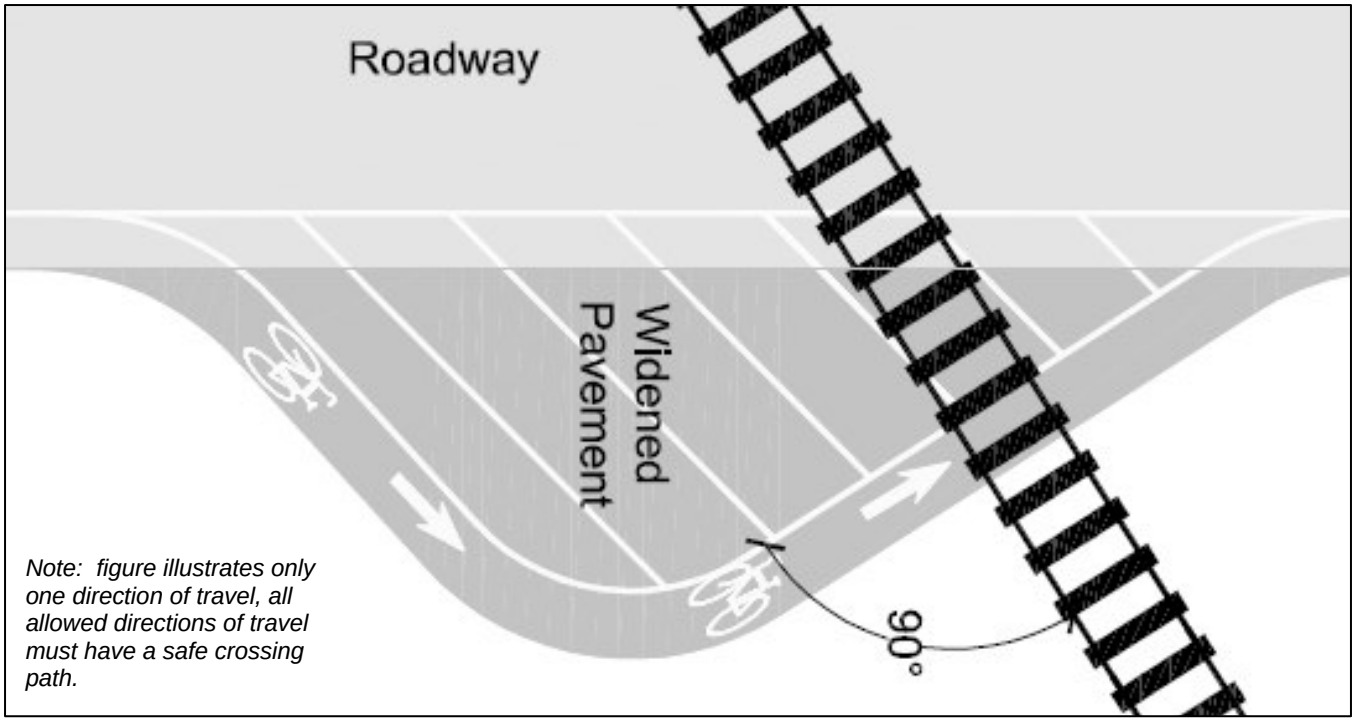

3J.02d Bicycle Safe Storm Drainage Grates. Storm drainage grates pose a hazard for bicyclists when the openings are parallel to the bicyclists' direction of travel. Bicycle tires can get caught between the bars of these grates and cause bicyclists to crash. Unsafe storm drainage grates should be replaced with grates shall that are consistent with NCDOT's standard grate design. "Figure 3-25: Bicycle Safe Drainage Grates" includes additional detail about bicycle-safe drainage grates.

Storm drainage grates and other features, such as manhole covers, must be flush with the roadway surface. Depressed features are a hazard for bicyclists and pedestrians when they are within the crosswalk and/or bicycle lanes.

Figure 3-25: Bicycle Safe Drainage Grates

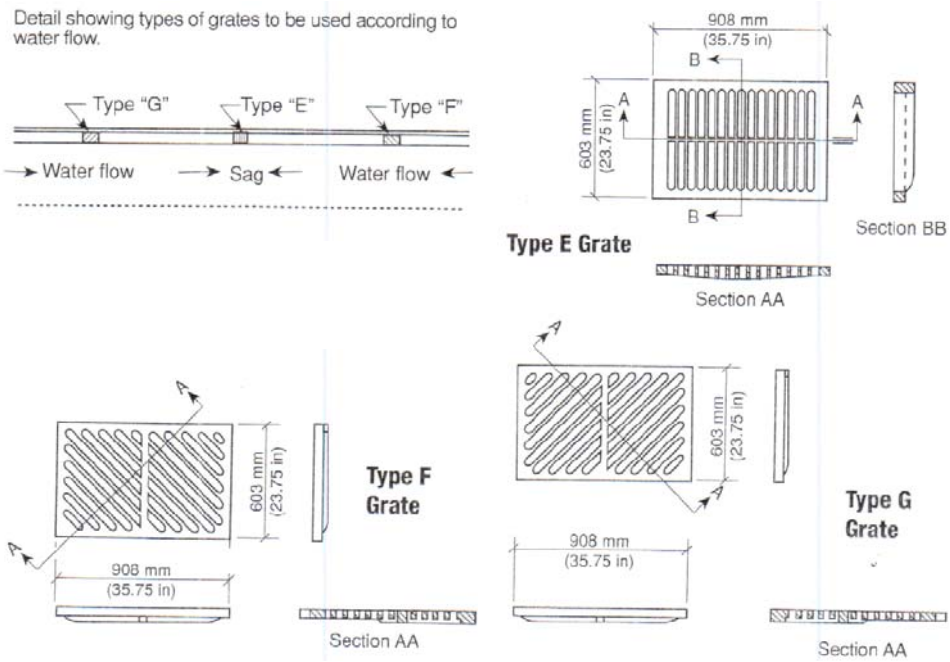

3J.02e Bicycle Detection and Signal Timing at Intersections. At signalized intersections consideration will be given to bicyclists in the timing of the traffic signal, and in the method of detecting the presence of bicyclists.

Signals should be designed to provide an adequate clearance interval for bicyclists who enter the intersection at the end of the green phase as well as designed to provide a total crossing time long enough to accommodate bicyclists starting up on a new green phase. When an intersection approach receives a green signal, the bicyclist needs enough time to react, accelerate, and cross the intersection. The current "AASHTO Guide for the Development of Bicycle Facilities" provides guidance on how to determine the green phase timing and clearance interval needed to accommodate bicyclists.

Signal faces should be positioned so that bicyclists can see the signal indication.

3K Multimodal Design Standards - Transit Facilities

Transit facilities consist of either: 1) a transit stops with ADA pad, 2) a transit stops with a bench and ADA pad, 3) a transit stops with shelters and ADA pad or 4) a transit transfer stations.

Transit stop locations must take into account four (4) factors:

- **Passengers.** Stops must be near places where there is an expectation of riders.
- **Access.** If a stop can not be located where riders are, they must be able to get to the stop conveniently and safely on a pedestrian network (sidewalks and crosswalks).
- **Traffic Characteristics.** Buses can not always stop where riders want them to because of complex traffic patterns.
- **Location.** In order to satisfy ADA requirements, developments may need to acquire additional easement on neighboring property if right-of-way is not available.

The final location of transit stops will be approved by the Transportation Planning Manager in consultation with the City Engineer or his/her designee.

A transit stop should have a combination of the following elements: transit sign, a map holder, a trash can, a bike rack, a bench, and/or a shelter. Shelter dimensions are shown in "Table 3-21: Transit Shelter Dimensions".

A transit stop should have a combination of the following elements: concrete ADA pad 5' wide (measured parallel to the roadway) by 8' deep (measured from the curb or roadway edge), transit sign, a map holder, and a trash can. A transit stop may also have a bike rack, a bench, a shelter or/and a power outlet for either a LED/ LCD signs for automated vehicle location information or for additional lighting.

Figure 3-26: Dimensions of Bus Boarding and Alighting Areas

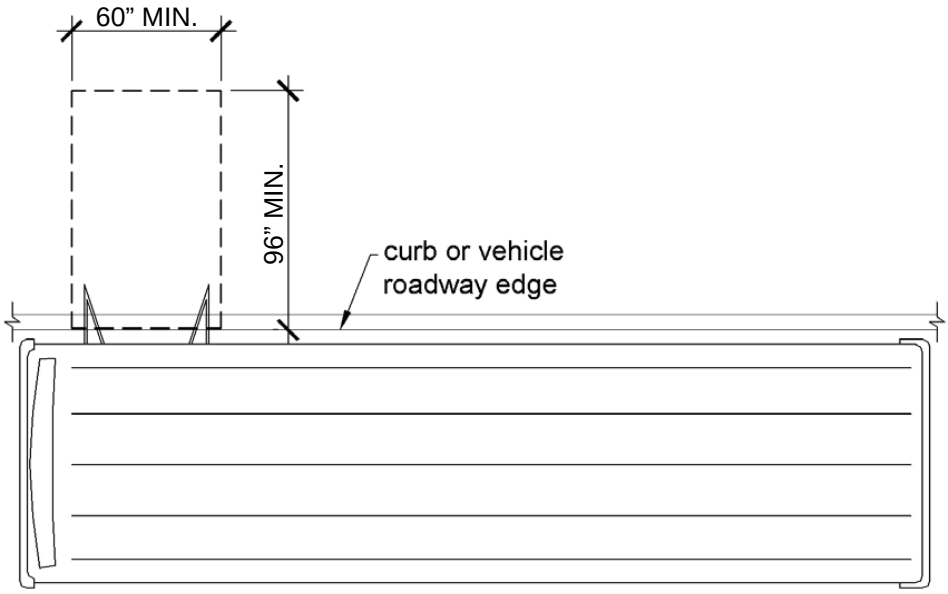

3K.01 Street-Side Factors

Transit stops and transit transfer stations should be placed either forty (40) feet after an intersection (with a minimum of 90' clearance) or ten (10) ft before an intersection (with a minimum of 100' clearance). Dimensions are shown in "Figure 3-27: Typical Dimensions for On-street Bus-stops". In general, the transit-stop "zone" shall be clear of parking or other roadway obstacles. Mid block transit stops are discouraged.

Figure 3-27: Typical Dimensions for On-street Bus-stops

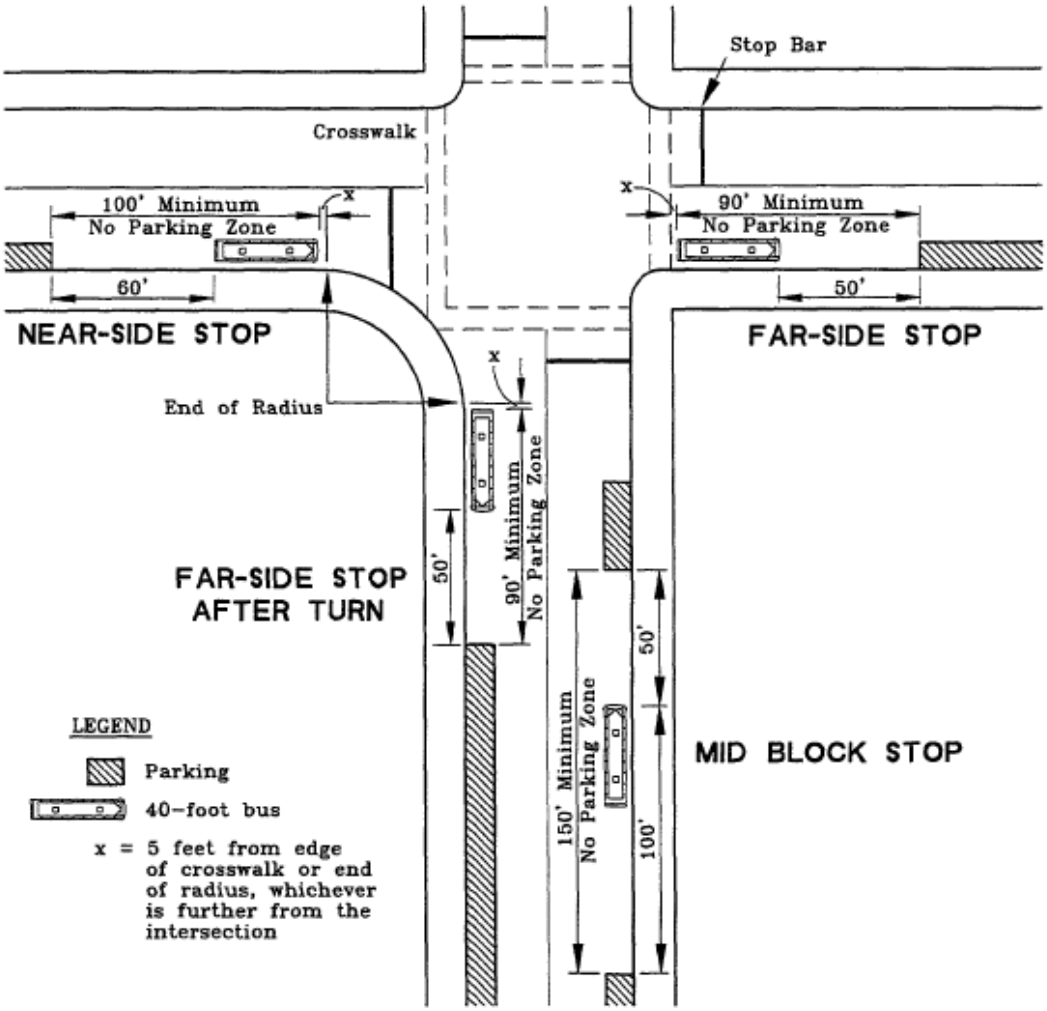

The distance from a businesses front door to a transit stop should be as short as possible and should be identified as the "pedestrian connection" in the project site plan.

To effectively use transit services a passenger requires an inbound and outbound transit-stop, for this reason projects may be required to improve Transit-stops outside of the project area.

3K.02 Curb-Side Factors

All shelters and benches should have a seat with backrest for at least two passengers. The seating should be oriented to view oncoming traffic, pedestrians and adjacent buildings. A bench should have a seat that is 14-24" in depth, 42" minimum length, and 17-19" height above the floor or ground. Additionally, the back support should equal the seat length and extend from a point 2" maximum above the seat to a point 18" minimum above the seat. Finally, the seat structure should support both vertically and horizontally a force of 250 pounds applied at any point on the seat. Further guidance is shown in "Figure 3-28. Conceptual Bench and Waiting Pad Design".

Figure 3-28: Conceptual Bench and Waiting Pad Design

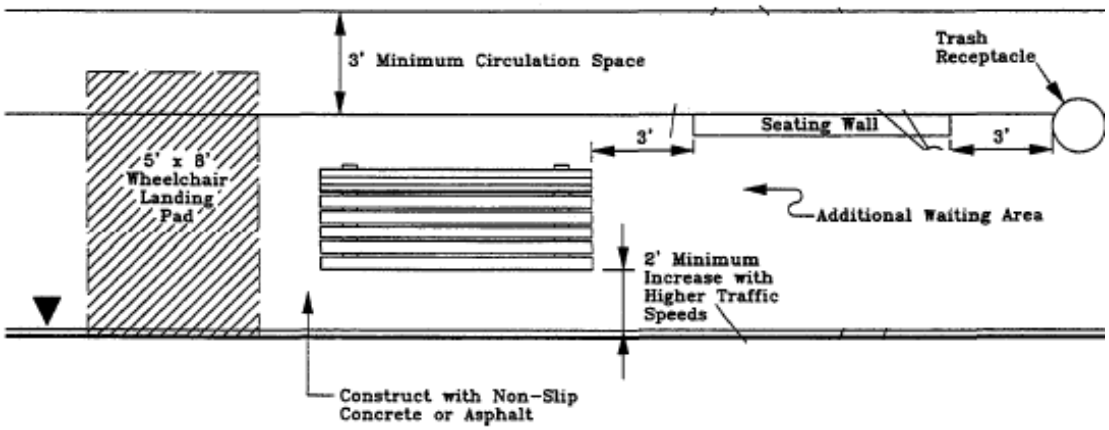

Transit stops generally accommodate a single transit vehicle, typically on a street but occasionally in an on-site location. Transit transfer stations must be designed to accommodate simultaneously an equal number of routes that use or are expected to use the particular location as a transfer point. All transit stop facilities must be installed on a non-slip, properly draining (maximum slope of 1:50 or 2%), concrete pad (the concrete pad should extend 12" beyond the edge of the bench, shelter or trash can. Shelter dimensions are shown in "Table 3-21: Transit Shelter Dimensions". Transit shelters and transfer station will provide a 3' tall by 4' long map holder protected from the elements and mounted at a height 60" above the finish floor to the centerline of the sign.

Table 3-21: Transit Shelter Dimensions

Length, Width & Depth	Transit stops	Transit Stations
Shelter Depth (feet)	6	7-8
Shelter Width (feet)	6-12	20+
Shelter Height (feet)	Approx. 7	Approx. 7

The transit stop must provide accommodation for individuals with disabilities. The location should be parallel and facing curb, be connected via a concrete path (a maximum slope of 2%) to the sidewalk to provide access to the bus and allow landing and pedestrian movements. It is recommended that transit stop amenities (benches, shelters, trash cans, and bike rack) be placed behind the sidewalk as can be seen in "Figure 3-29: Typical Shelter Design".

Figure 3-29: Typical Shelter Design

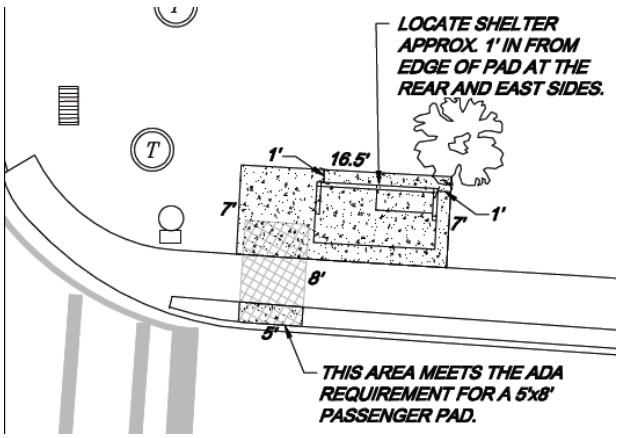

If amenities are placed between the curb and sidewalk they must be set at least 2' back from the curb, increasing with higher traffic speeds. Transit stop signs must be placed at least 2' back from the curb. The connected concrete path width shall allow for two (2) wheel chairs in the sidewalk at the same time. Details of these elements are shown in "Figure 3-29: Typical Shelter Design", "Figure 3-30: Transit Stop Area Design Elements" and "Figure 3-31: ADA Requirements Within Shelter".

Figure 3-30: Transit Stop Area Design Elements

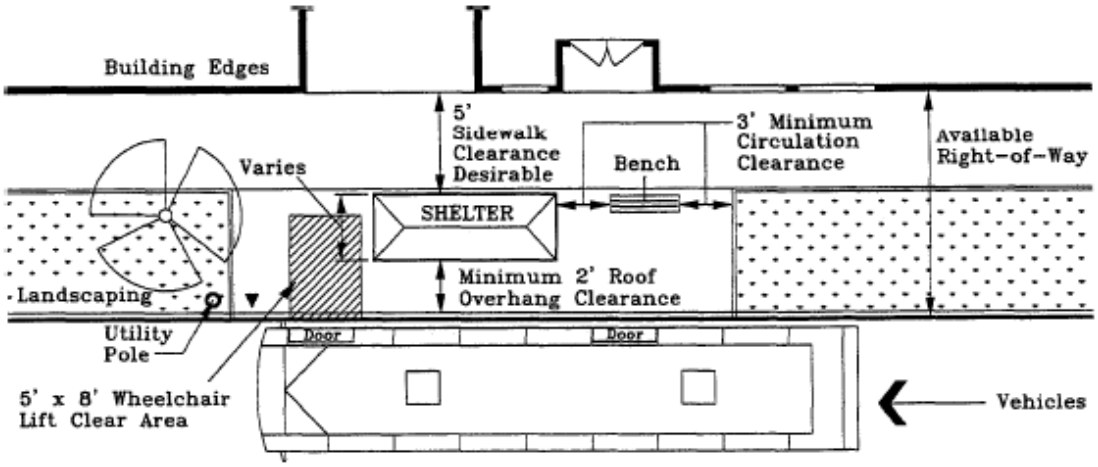

A shelter shall have back and side panels that are transparent or glazed with distinctive patterns to indicate presence of the panels with 6" clearance between the ground and the bottom of the panels. A shelter roof must be leak proof and runoff shall be diverted to rear corners of shelter. Shelter frame shall be designed to be stable with or without the walls and roof. All shelter and bench fasteners shall be concealed or if exposed should be tamper resistant. Within the roof line of the shelter and protected from the weather, a minimum of a 30" x 48" clear floor area must be provided to ensure ADA compliance, as shown in "Figure 3-31: ADA requirements within Shelter".

Figure 3-31: ADA Requirements Within Shelter

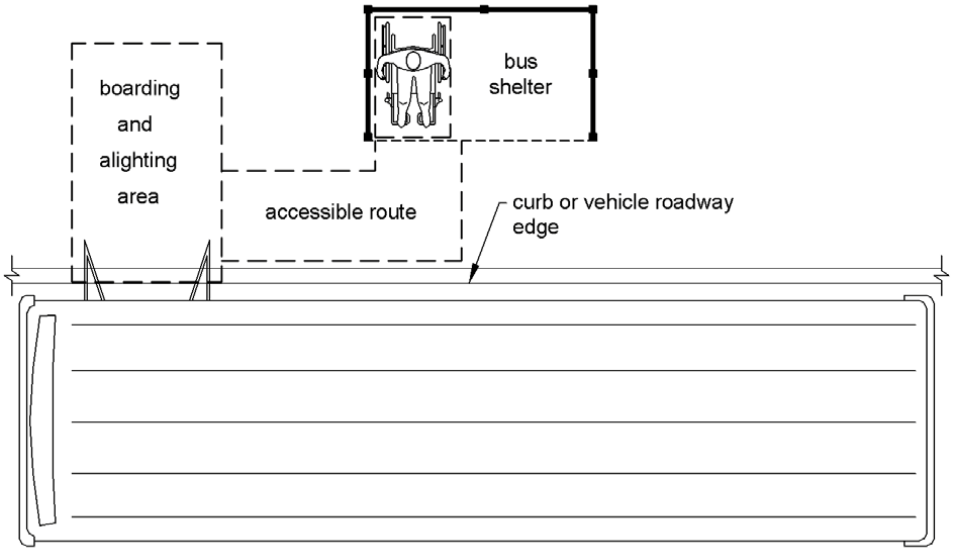

The shelter should be visible to motorists, bicyclists, and pedestrians during daylight hours and at night. It is not required but is recommended to have between 2 to 5 footcandles of light. A shelter may also have an electrical source for LED/LCD signs for automated vehicle location information. The electricity can be provided via a power outlet or an alternative source of electricity, such as solar cells. Solar cells are preferred. A transit transfer station should have appropriate lighting and an electrical source for LED/LCD signs for automated vehicle location information.

Landscaping near or around a transit stop or transfer station should be limited in order to ensure visibility between the driver and passengers and in order to limit ADA conflicts. Locating a bus-stop near or under a large tree can provide beneficial protection from the weather as long as visibility from the roadway and passenger safety is not negatively impacted.

A shelter must be maintenance-free thus aluminum or anodized frames are preferred. The City's Transportation Planning Division and Development Services Department will consider other materials on a case-by-case basis.

3K.03 Permit Requirements

Shelters are treated as structures and require the appropriate permits, following building, zoning, and engineering standards.

Development Services Department must approve structures prior to construction and grant a permit. Additional permit(s) for the site plan shall be received from the Development Services Department. If the site is on a North Carolina Department of Transportation (NCDOT) corridor a right-of-way encroachment agreement will be needed from NCDOT. Shelters shall be designed to comply with the North Carolina State Building Code for Accessibility, the Americans with Disabilities Act (ADA) regulations and the North Carolina State Building Code for Buncombe County.

With the completion of a project the easement for the transit-stop, shelter and/or transfer shall be provided to the City of Asheville. An easement agreement is available from the Transportation Department. Permit requirements may vary according to jurisdiction.

SECTION 4 - STREET LIGHTING STANDARDS

4A Street Lighting

4A.01 General

Lighting of publicly accessible streets, bike lanes, sidewalks and other pedestrian areas is important for public safety. To ensure the installation of street lighting that is adequate to achieve this purpose, the following requirements are established. Please refer to "Article XI" of the *Unified Development Ordinance* for standards regulating all other outdoor lighting.

4A.01a Easement Required. Adequate rights-of-way or utility easements shall be dedicated to the City to allow the electric utility company to install street lights. Ideally, facilities with detached bike paths or sidewalks may use a combined signage, utility, and pedestrian easement for placement of the street lights between the curb and bikeway. Ideally two (2) feet of horizontal clearance from the sidewalk or bike path should be met. Where a bike path or sidewalk is attached to the street curb and gutter, street lights should be placed behind the sidewalk or path within a minimum three (3) foot wide utility easement. Utility easements for street lights are not exclusive and may be landscaped or used for parking subject to City approval. If there is an exclusive easement behind an attached walk or path, the street lights shall be located beyond that easement in an additional three (3) foot wide easement.

4A.01b New Development. The installation costs of street light fixtures associated with new development shall be paid by the developer. The City shall assume continued maintenance and energy costs associated with new installations after the associated streets are accepted for maintenance by the City. Upon street acceptance, the owner/developer must transfer the street lighting electric bill into the City's name. All other fixtures must be approved by the City. All underground facilities shall be a pedestal mount design.

4A.01c Other New Installation. The City will authorize the installation of additional street lighting on existing City maintained rights-of-way upon the determination that there is a demonstrated public safety need. The City will not assume costs for the installation, maintenance, or energy costs of street lights on streets not maintained by the City.

4A.01d Annexed Areas. The City shall assume costs of existing street lights in newly annexed areas provided the lights comply with City standards and their associated streets have been accepted for maintenance by the City. The City will take responsibility for the utility costs associated with the streets, effective the first full billing cycle following the acceptance of the street.

4A.01c Priorities for Installation. Street lights may be installed by the City within the City maintained right-of-ways in new locations based the following reasons:

- Reduction of an identified night-time traffic accident problem correctable through street light installation.
- Major traffic corridors with significant turning movement conflicts and night-time pedestrian activity.
- Major traffic corridors with significant night-time turning movement conflicts.
- Arterial and collector intersections and/or horizontal or vertical alignment changes.
- Residential street lighting.
- Commercial alleys with significant night-time pedestrian activity.
- Other public safety needs.

4A.02 Illumination, Height, and Spacing Requirements

The following standards will be observed for the illumination, height, and spacing requirements for street lights.

Table 4-1: Illumination Requirements for Street Lights

Districts	Approved Lighting Type	Rated Brightness
Luminance - Residential Districts	High Pressure Sodium Vapor or Metal Halide	5,800 to 9,500 lumens
Luminance - Non-residential Districts	High Pressure Sodium Vapor or Metal Halide	16,000 to 50,000 lumens

Table 4-2: Height Requirements for Street Lights

Districts	Height	
	Minimum	Maximum
Residential Districts	16 feet or as specified	25 feet (18 feet for post mount decorative lights)
Non-residential Districts	30 feet	35 feet

Table 4-3: Spacing Requirements for Street Lights

Street Classification or District	Spacing Along Curved or Staggered Alignment Segments Measured from the Centerline of the Road
Local and Collector Streets (Residential Districts)	125-150 feet
Arterial Streets	75-100 feet
Business Districts	55-80 feet

4B Decorative or Other Non-Standard Street Lighting

The provisions of this section are not intended to prevent the use of decorative or other non-standard street lighting fixtures provided their use has been approved by the City and complies with the standards set forth in "Article XI" of the *Unified Development Ordinance*. The use of such fixtures to complement an overall design context is allowed. Decorative fixtures not maintained by the local electric utility company will be the responsibility of the owner/developer to maintain.

The City is receptive to establishing agreements that allow the marginal additional costs of installation, maintenance and energy usage, if any, to be borne by the developer, property owner(s), homeowners association, business improvement district, or other responsible party.

The City encourages the use of energy efficient facilities, provided they are maintainable by the local utility company.

SECTION 5 - UTILITIES

5A General

The City of Asheville provides only water, stormwater, and limited fiber optic services. the remainder are provided by private providers. The non-City major utility providers listed below, establish their own installation and material standards and should be separately contacted.

Sanitary Sewer …… Metropolitan Sewage District
2028 Riverside Drive, Woodfin, NC 28804
(828) 254-9646

Electrical ……. Progress Energy
P.O. Box 1551 Raleigh, NC 27602-1551
(828) 254-9646

Cable Television ……. Charter Communications
89 Peachtree Road, Asheville, NC 28803
(877) 728-3126

or

Mediacom
719 Old Spartanburg Hwy, Hendersonville, NC 28792
(866) 755-2225

Telephone ……..…. AT&T
(888) 757-6500

Natural Gas ……... PSNC Energy
P.O. Box 100256, Columbia, SC 29202
(877) 776-2427

5A.01 Utility Layouts

For developments in the corporate and jurisdiction of the City of Asheville, the following utility layouts should be used in public and private street rights-of-way to avoid conflicts and to facilitate maintenance. "Figure 5-1: Suburban Cross-Section" layout should be considered the typical arrangement, with the "Figure 5-2: Urban Cross-Section" and "Figure 5-3: Low Impact Cross-Section (Steep Slope)" layouts used in special circumstances as designated by the Director of Transportation and/or Public Works. Utility locations vary by site conditions. Utilities shall bury their infrastructure a minimum of 24".

Figure 5-1: Suburban Cross-Section

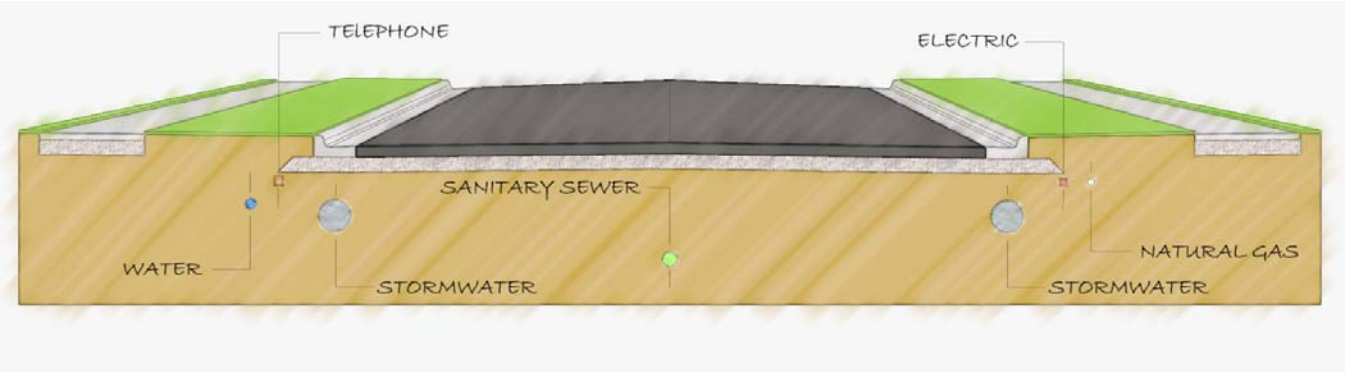

Figure 5-2: Urban Cross-Section

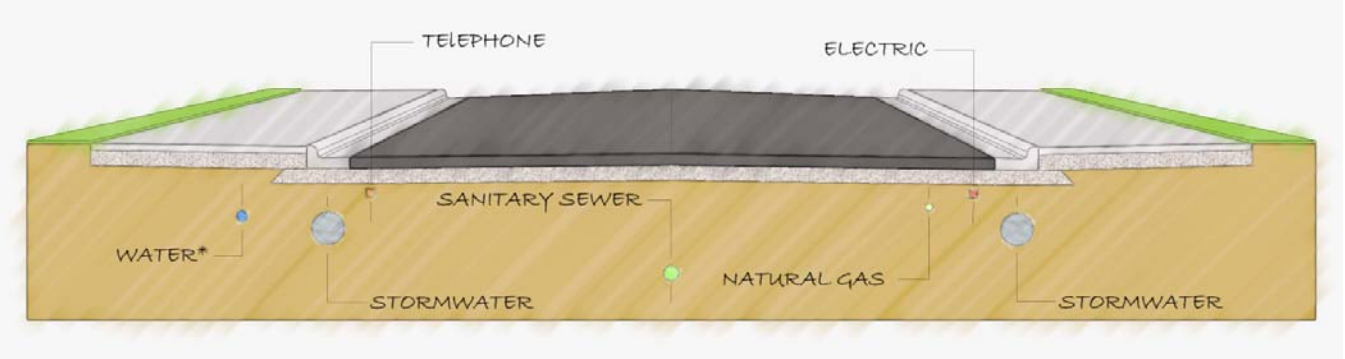

Figure 5-3: Low Impact Cross-Section (Steep Slope)

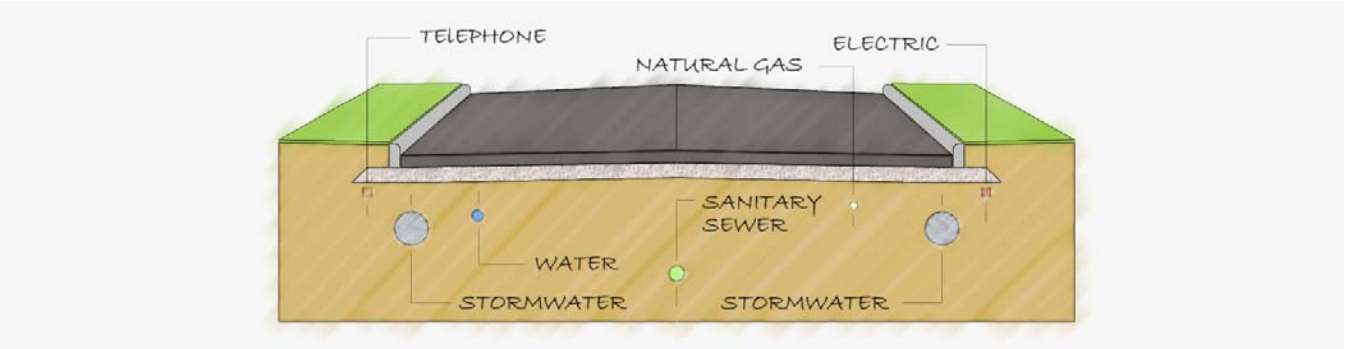

5B Fiber Optic System

5B.01 General

The City plans to develop a fiber optic network over time as part of the implementation of its economic development plan. The City of Asheville's economic development future depends on an expansion of the use of technology by its businesses and residents. As a consequence, it is important to provide for the ability to access this technology in the most effective fashion possible. Fiber optic cable provides the best method to allow the highest speed of data transfer and technology access. New development will be required to help lay the foundation for this fiber optic network through the placement of ducting to support future extension of fiber optic lines to serve businesses and residents. This section provides the standards for the placement and installation of this ducting.

5B.02 Fiber Optic Duct System

The fiber optic duct system will consist of rigid pipe, sweeps, handholes (for sidewalks), and manholes (for streets). It will be primarily constructed following the traditional standards of underground construction.

The pipe will be placed first to establish the routing. A single copper conductor will be run through a duct for locating purposes. Grounding can occur as actual fiber/copper/etc lines are installed. Placement of lines within the conduit will be done to maximize usage of duct as illustrated in the example below.

Figure 5-4: Fiber Optic Duct System

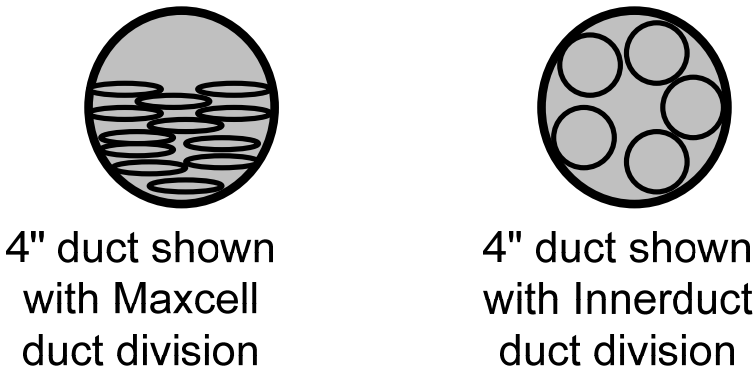

5B.03 Installation of Fiber Optic Duct System Required

New installed streets and or sidewalks shall provide the fiber optic ducting in accordance with these standards as part of the general utility plan for the development.

5B.04 Fiber Optic Duct System Installation Standards

5B.04a Depth. The duct system should be placed between 24" and 36" deep for its protection.

5B.04b Locator Wire. A single insulated copper wire should be buried with the duct system for a method of locating while the pipe is unoccupied or might happen to contain non-metallic cables.

5B.04c Urban Locations. In downtown and urban areas, ducts should be placed under sidewalks where possible, rather than streets to allow greater ease of access to the duct system for adding spurs, loops, pullboxes, etc.

5B.04d Pullboxes/Handholes. Pullboxes/handholes should be placed at every other lot line in new street installations and at every lot line in incremental installations such as the development of a single lot. Placement shall take future service to lots on the opposite side of the street into consideration. Typical pullbox size is 24" x 36". A "City of Asheville Use Only" label shall be provided on the inside of the pull boxes.

5B.04e Under-Street Installation: Ducts installed under streets will require traffic-rated manholes for access.

5C Other Utilities

5C.01 Water Services

The City of Asheville's standards and specifications for water services are separately provided by the City's Water Resources Department and can be viewed by accessing the City's internet web site "www.ashevillenc.gov" or by contacting Water Resources Department at (828) 259-5955.

5C.02 Stormwater Services

The City of Asheville stormwater standards are provided in Section 8 of this manual and section 7-12-2 of the City's Unified Development Ordinance. This information can be accessed through the City's internet web site "www.ashevillenc.gov" or by contacting the Development Services Department.

5D Pipe Trenches

5D.01 Excavation and Preparation of Trenches

Trenches for sanitary sewer lines, force mains, and stormwater lines shall be excavated to the required depth to permit the installation of the pipe along the lines and grades shown on the construction drawings. Where excavation is in rock, the rock shall be removed to a depth of at least six (6) inches below grade and shall be backfilled with materials in accordance with the following pipe laying and backfilling specifications. Wet trenches shall be stabilized with #78 M stone or with a base layer of #57 stone. Trench standards and specifications for water distribution lines are separately provided by the City's Water Resources Department.

5D.02 Pipe Laying and Backfilling

All pipe shall be laid in accordance with the manufacturer's recommendations. Pipe laying and backfilling shall be accomplished in a manner to prevent damage and misalignment of the pipe. The subgrade at the bottom of the trench shall be shaped to secure uniform support throughout the length of the pipe. A space shall be excavated under the bell of each pipe to provide space to relieve bearing pressure on the bell and to provide room to adequately make the joint. Open ends of the pipe shall be plugged with a standard plug or cap at all times when pipe laying is not in progress. Trench water shall not enter the pipe. Backfill material shall be free from construction materials, debris, and frozen, organic, or unstable material. The top two (2) feet of backfill material shall be free from stones greater than 2 inches in diameter. Under roadways and extending at a slope of 1 to 1 beyond the back of the curb, measured perpendicular from the centerline, backfill shall be compacted to a density of no less than 100% standard Proctor maximum dry density as measured by American Association of State Highway and Transportation Officials (AASHTO) method T99.

Backfill shall be placed in lifts of eight (8) inches or less of uncompacted soil. Other fill material shall be compacted to a density of no less than 95% of the maximum dry density as measured by AASHTO method T99. Backfill material shall be placed in lifts of six (6) inches or less of uncompacted soil. Suitable backfill material shall be utilized and compacted in accordance with the City compaction requirements and the pavement repair shall be in accordance with the applicable "Section 5 - Utilities" repair and replacement details.

All trenches shall be properly backfilled at the end of each working day. All curb cuts shall be repaired within a maximum of three (3) days from the date the cut is made. If conditions do not permit a permanent repair within the given time limit, permission to make a temporary repair must be obtained from the Street Services Division of the Public Works Department.

In locations where backfill material is temporarily stockpiled on the roadway surface, a layer of 1½ inches of screenings shall be used between the pavement surface and the backfill material.

5D.03 Boring and Jacking

In locations where open pipe trenches are not allowed, dry bore and jack operations may be allowed. Boring and jacking shall be accomplished in a manner to prevent damage or misalignment of the pipe. Smooth wall or spiral welded steel pipe may be jacked through dry bores slightly larger than the pipe bored progressively ahead of the leading edge of the advancing pipe. The spoil material shall be mucked by the auger back through the pipe during the boring operation. As dry boring progresses, each new section of the encasement pipe shall be butt-welded to the section previously jacked into place.

The steel pipe shall be manufactured of grade 'B' steel with a minimum yield strength of 35,000 psi in accordance with American Society of Testing and Materials (ASTM). When used along or under a roadway maintained by North Carolina Department of Transportation (NCDOT), the encasement pipe shall be coated to meet NCDOT requirements.

If voids are encountered while installing encasement pipe 30 inches or larger, grout holes shall be installed at 10 foot centers and filled with 1:3 Portland cement grout at sufficient pressure to prevent settlement of the roadway, unless NCDOT approval stipulates otherwise. Other grout mixtures may be submitted for approval.

In the event that an obstruction is encountered during the boring and jacking operation, the auger is to be withdrawn and the excess pipe is to be cut off, capped, and filled with 1:3 Portland cement grout at a sufficient pressure to fill all voids before moving to another site.

Table 5-1: Casing Pipe Wall Thickness list the minimum thickness of smooth wall or spiral welded encasement pipe.

Table 5-1: Carrier Pipe Wall Thickness

Casing Pipe Size (Outside Diameter in inches)	Wall Thickness (inches)
12 $^{3}/_{4}$	0.188
14	0.250
16	0.250
18	0.250
20	0.250
24	0.250

Table 5-1: Casing Pipe Wall Thickness (continued)

Casing Pipe Size (Outside Diameter in inches)	Wall Thickness (inches)
30	0.312
36	0.375

Casing pipe shall be installed with a minimum cover of three (3) feet under pavement.

All carrier pipe shall be slip joint ductile iron pipe resting on steel skids as shown on "Standard Detail 5.06: Carrier Pipe in Steel Encasement" to prevent damage to the pipe bell. A minimum of two (2) skids per joint of carrier pipe spaced evenly in the encasement pipe shall be required. Pipe bells shall not contact the interior of the casing pipe. No blocks or spacers shall be wedged between the pipe and the top of the casing. "Table 5-2: Carrier & Casing Pipe Size" lists the minimum diameters carrier and casing pipes shall have.

Table 5-2: Carrier & Casing Pipe Size

Carrier Pipe Size (inches)	Casing Pipe Size (inches)
4	12 $^{3}/_{4}$
6	12 $^{3}/_{4}$ or 14
8	18
10	20
12	24
14	26
16	28

In cases where circumstances such as utility conflicts will not allow crossing by bore and jack method, the City may consider approving other methods of crossing with additional requirements to minimize pavement failure and maintenance problems.

5E Utility Cuts Within City Maintained Street Rights-of-Way

Utility cuts are the excavation of trenches needed to provide or maintain underground utility services to the public. In an effort to protect the street infrastructure and maintain safe travel ways for all modes of transportation (motor vehicle, bicycle, pedestrian, and transit), a Right-of-way Cut Permit is required for any utility cut within the City's maintained right-of-way to help insure trench and cut repairs have been completed to the following standards.

5E.01 Trench and Cut Repairs

To protect the street infrastructure and safety, all utility trench and cut repairs must be perpendicular or parallel to the existing edge of pavement and square or rectangular in shape with a minimum cut size to be two (2) feet from any fixed object on all sides (manholes, utility valves, concrete infrastructure). Repairs shall be completed in accordance with the following:

5E.01a Asphalt Utility Cuts. If an asphalt trench and cut repair inside City maintained rights-of-way is left open for 10 calendar days, it shall consist of ABC compacted to 100 percent Standard Proctor. From 11 to 30 calendar days, it shall consist of bituminous binder course of Type I 19.0B. From 31 calendar days, cut repair shall be completed with a wearing surface course of Type S 9.5B. The repair material thicknesses shall be in accordance with applicable "Section 5 - Utilities Standard Details". If an asphalt strip between a cut and the edge of the pavement is three (3) feet or less, the strip will be removed and replaced as part of the cut. New asphalt

utility cuts within and over half of an existing asphalt utility repair area will require the replacement of the entire existing repair area or an area at the discretion of the City Engineer or his/her designee.

Trench cuts in asphalts roadways that exceed half of the roadway width in a shoulder section shall require a full width overlay with S 9.5B extending 17.5 feet to each side of the trench. For those trenches that exceed half of the roadway width in a gutter or curb and gutter section, the full width mill and overlay with S 9.5B shall extend five (5) feet to each side of the trench.

Trench cuts in asphalt roadways that exceed more than 20' parallel to the road will require a minimum half roadway mill and overlay.

Utility cuts in asphalt roadways with an asphalt age of 3 years or less will require a minimum half roadway mill and overlay.

All street markings and traffic control devices shall be replaced to City Standards.

5E.01b Concrete Utility Cuts. Concrete trench and cut repairs inside City maintained rights-of-way shall within 10 calendar days be completed in accordance with "Standard Detail 5.02: Rigid Pavement Repair".

For utility cuts in concrete curb, curb and gutter, or sidewalk, the concrete must be removed and replaced from nearest expansion or tool joints on both sides of utility cut. Any replacement of sidewalk with a decorative stamp pattern must be stamped with the same pattern as the existing sidewalk. Any existing sidewalk ramps removed must be replaced to the current ADA Standards.

When concrete sidewalk utility cuts are required in locations where the sidewalk contains reinforcing steel adjacent to a tree pit, a straight vertical cut shall be made to remove the reinforced concrete. Repair the sidewalk cut by drilling six (6) inches into the existing concrete along the vertical face of the cut then dowel in and secure Number 4 steel rebar with approved epoxy. Replace the sub-grade, then splice steel in the new cut at a minimum of four (4) inches and replace remaining steel in accordance with "Standard Detail 3.22: Sidewalk Tree Pit, Reinforced Concrete Sidewalk" before replacing the concrete.

5E.01c Soil Utility Cuts. Soil cut inspection limits within City maintained rights-of-way are a minimum of five (5) feet out from the edge of the pavement, five (5) feet out from the back of curb, or the back edge of the sidewalk furthest from the pavement. Soil trench and cut repairs inside City maintained rights-of-way shall within 10 calendar days be completed accordance with "Standard Detail 5.07: Shoulder Repair" inside the inspection limits.

5E.01d Other Utility Cuts. Brick trench and cut repair inside City maintained rights-of-way shall be completed within 10 calendar days by replacing existing brick above six (6) inch lifts of compacted soil and eight (8) inches of ABC stone compacted to 100 percent standard proctor.

Utility cuts in granite stone curb require that the granite slab be removed and then replaced to match existing conditions.

5E.02 Excess Spoil Piles

Any excess spoil piles shall be removed and soil disturbances and utility cuts shall be restored to original or better condition.

5E.03 Crack and Joint Sealing

The repair areas consisting of sealing existing longitudinal and transverse pavement cracks, joints, and traffic signal detector / feeder loop lines with hot-poured rubber asphalt, modified asphalt compound (peel and stick

roll) and NCDOT approved Qualified Products List (QPL) materials shall be applied as per the following requirements :

5E.03a Hot-poured Rubber Asphalt. Hot-poured rubber asphalt must have a two (2) inch sealed overband and be applied as per manufacture's recommendations.
5E.03b Modified Asphalt Compound Tape. Modified asphalt compound tape must be four (4) inches wide, centered over the crack or joint, and applied as per manufactures recommendations.
5E.03c Traffic Signal Loop Lines. See NCDOT QPL list and apply as per manufactures recommendations.

5E.04 Right-of-Way Cut Permit

In the event that a resident, a contractor, or utility companies will be cutting asphalt, concrete, brick, or dirt surfaces within the right-of-way of City maintained streets, then excavating the sub surface for the purpose of installing or repairing public or private utilities as well as above ground infrastructure, all parties are required to obtain a Right-of-way Street Cut Permit.

5E.04a Permit Application. Apply for the Right-of-way Cut Permit at the located in the Public Works Building at 161 S. Charlotte St. and be able provide the following information along the payment for the permit fee:

- Address nearest to the location of the cut.
- Name of the nearest intersecting street.
- Length and width dimensions or total square feet of the cut.
- Type of surface to be cut.

5E.04b Permit Fee. Right-of-way Cut Permit fees are based on the total square feet of the cut with a minimum size of 25 square feet. Contact the City of Asheville's Street Services Division of the Public Works Department for most current cost per square foot.

SECTION 6 - PUBLIC SAFETY STANDARDS

6A General

These standards are established to ensure that new development and redevelopment meets the public safety requirements of the City and the State. Public safety standards addressed in this section include:

- Fire Safety Standards
- Traffic Calming Standards
- Retaining Wall Barriers
- Crime Prevention Through Environmental Design (CPTED) Strategies

6B Fire Safety Standards

6B.01 General

This section specifies the circumstances and standards for installing fire apparatus access roads, fire lanes, and key control boxes.

6B.02 Specific Terminology

For the purpose of this section, certain terms are defined as follows:

Fire Chief - The chief officer of the fire department serving the City of Asheville, or their duly authorized representative.

Fire Code Official - The Fire Marshal or other designated authority charged with the administration and enforcement of the fire code by the Fire Chief.

Fire Apparatus Access Road - A road that provides fire apparatus access from a fire station to a facility, building or portion thereof. This is a general term inclusive of all other terms such as fire lane, public street, private street, parking lot lane and access roadway. When two access roads are required, they shall be placed a distance apart equal to not less than one half of the length of the maximum overall diagonal dimension of the property or area to be served, measured in a straight line between accesses.

Fire Lane - An approved road or other passageway developed to allow the passage of fire apparatus. A fire lane is not necessarily intended for vehicular traffic other than fire apparatus.

High Rise Building - Buildings having occupied floors located more than 75 feet above the lowest level of fire department vehicle access.

Mid Rise Building - Buildings having occupied floors located more than 30 feet above the lowest level of fire department vehicle access.

6B.03 Reference Material

The following reference sources are to be used in interpreting and applying these standards as necessary:

City of Asheville Fire Prevention and Protection Ordinance Chapter 6
NC Fire Prevention Code, latest edition
NC Building Code, latest edition

6C Fire Apparatus Access Road

6C.01 General

All industrial, commercial, and residential developments shall provide adequate emergency vehicle access. When adequate emergency access is not available from an approved public street, an applicant for construction approval shall construct a fire apparatus access road. Fire apparatus access roads must accommodate all emergency vehicles, including fire equipment.

6C.02 Scope

Fire apparatus access roads shall be installed in accordance with this section and all other applicable requirements of the NC Fire Prevention Code.

6C.03 Minimum Specifications

6C.03a Access Road. Adequate emergency access is a minimum 20 foot wide unobstructed fire apparatus access road with an unobstructed vertical clearance of 13.5 feet and meets all applicable standards as set forth in Section 502 of the NC Fire Prevention Code. Access shall be provided for any building or facility which is set back more than 150 feet from a public street or exceeds 30 feet in height and is set back more than 50 feet from a public street. Roads shall be at least 20 feet in width with the street edge closest to the building at least 10 feet away from the building and no more than 30 feet from the building. The surface of the fire lane shall be paved with a minimum of 6 inches of ABC stone and 2 inches of S 9.5 B or other approved driving surface capable of supporting the imposed load of fire apparatus weighing at least 75,000 pounds.

6C.03b Road Grade. Fire apparatus access roads shall not exceed 15 percent in grade. Where an approved fire protection system is installed, grades steeper than 15 percent but less than 18 percent are permitted, as approved by the Fire Chief and the City Engineer or their designees.

6C.03c Turning Radius. The minimum turning radii shall provide the radius needed to accommodate an American Association of State Highway and Transportation Officials (AASHTO) SU-30 / Rt=42ft" vehicle template.

6C.03d Dead Ends. Dead-end fire apparatus access roads in excess of 150 feet shall be provided with approved turnaround provisions.

6C.03e Fire Apparatus Access Road Gates. The installation of security gates across a fire apparatus access road shall be approved by the fire code official. Gates securing the fire apparatus access roads shall comply with all of the following criteria:

1. The minimum clear gate width shall be 20 feet. Minimum gate set back from intersections with private/ public streets shall be a minimum distance of 40 feet, or as determined by the Fire Chief and City Engineer or their designees, to allow the emergency vehicle clearance to safely operate the gate.
2. Gates shall be of the horizontal swinging or sliding type. Vertically operating gates are not permitted. The access road shall be painted with yellow striping to show the depth of the gate swing. Swinging gates shall be posted with a sign that states "CAUTION - GATE OPENS IN" or OUT" as appropriate. The gates shall be designed so that the access roadway turning radius shall not be obstructed by the operation of the gate. Gates cannot move across public property or obstruct any pedestrian use areas, such as sidewalks.
3. Construction of gates shall be of materials that allow manual operation by one person. Hardware used to disengage a power operated gate mechanism shall be identified, with a different color or markings, so as

to be visually distinctive from the rest of the controls and mechanisms.

4. Gate components shall be maintained in an operative condition at all times and replaced or repaired when defective. Inoperative gates shall remain in the full open position until repaired or operating power is restored.
5. All gates limiting access will be required to provide emergency access controls for Fire Department entry. Access gates are required to be electrically motorized or attended by continuous staffing at the gate location(s). Operation at the electrically motorized gate shall be by an approved audible preemption device and coded keypad (siren operated sensor). Gates must fully open within 15 seconds of activation and remain in the open position until closed by operation of the electrical control device. A coded number override key pad is required so that the police department may make a silent entry. Access controls shall be exterior to the gate and located for activation by the vehicle operator without dismounting from the vehicle. The key pad control pedestal must be identified with an approved sign. This sign must be securely fastened to the pedestal and legible from the approaching vehicle. The gate must have an emergency power backup system designed for continuous duty OR open and hold the gate open until line power is restored. Emergency opening devices shall be approved by the fire code official.
6. Manual opening gates shall not be locked with a padlock or chain and padlock unless they are capable of being opened by means of forcible entry tools or by use of a KNOX padlock. Manual gates are not approved for use on required fire department access roads.
7. Locking device specifications shall be submitted for approval by the fire code official. Plans and specifications for gate systems shall be submitted to the City of Asheville Fire Marshal's Office for review, permitting, and approval prior to installation.

6C.04 Specific Requirements for Various Classes of Development

6C.04a One or Two-Family Residential Developments. Developments of one or two-family dwellings where the number of dwelling units exceeds 30 shall be provided with separate and approved fire apparatus access roads. Where there are 30 or fewer dwelling units on a single public or private access road and all dwelling units are protected by approved residential sprinkler systems, access from two (2) directions shall not be required. The number of dwelling units on a single fire apparatus access road shall not be increased unless the access road will connect with future development, as determined by the Fire Code Official.

6C.04b Multiple-Family Residential Developments. Multiple-family residential projects having more than 100 dwelling units shall be equipped throughout with two (2) separate and approved fire apparatus access roads. Projects having up to 200 dwelling units may have a single approved fire apparatus access road when all buildings, including nonresidential occupancies, are equipped throughout with approved automatic sprinkler systems.

Multiple-family residential projects having more than 200 dwelling units shall be provided with two (2) separate and approved fire apparatus access roads regardless of whether they are equipped with an approved automatic sprinkler system.

6C.04c Commercial Developments. Buildings or facilities having a gross building area of more than 62,000 square feet shall be provided with two (2) separate and approved fire apparatus access roads. Projects having a gross building area of up to 124,000 square feet may have a single approved fire apparatus access road when all buildings are equipped throughout with approved automatic sprinkler systems.

6C.04d High Rise and Mid Rise Developments. High rise and mid rise buildings shall be provided with approved fire apparatus access roads capable of accommodating fire department aerial apparatus. Overhead utility and power lines shall not be located within the aerial fire apparatus access area. Fire apparatus access

roads shall have a minimum unobstructed width of 26 feet in the immediate vicinity. At least one of the required access routes meeting this condition shall be located within a minimum of 15 feet and a maximum of 30 feet from the building, and shall be positioned parallel to one entire side of the building. The grade for an aerial apparatus access lane shall not exceed five percent (5%). In no case shall the maximum grade for an aerial apparatus access road exceed 10 percent.

6D Fire Lanes

6D.01 Intent and Scope

Fire lanes shall be installed in accordance with this section and all other applicable requirements of the NC Fire Prevention Code.

6D.02 Installation

Fire lanes shall be provided for any building or facility which is set back more than 150 feet from a public street or exceeds 30 feet in height and is set back more than 50 feet from a public street

6D.03 Design

Fire lanes shall be at least 20 feet in width with the street edge closest to the building at least 10 feet away from the building. The surface of the fire lane shall be paved with a minimum of six (6) inches of ABC stone and two (2) inches of S 9.5 B.

6D.04 Bollards

If the Fire Chief determines that barriers are needed to prevent automobile traffic from using an emergency access lane, then the applicant for construction approval shall install traffic bollards. Traffic bollard designs shall provide for immediate access of emergency vehicles, without requiring these vehicles to stop and maneuver around, or unlock, any structures. The Fire Chief shall have final approval of all bollard designs.

6D.05 Sign and Markings

Where required by the fire code official, fire apparatus access roads shall be marked with permanent NO PARKING—FIRE LANE signs. Signs shall be a type “R8-31” or equivalent reflective sign no less than 12” x 18” in size, white background, with the wording “No Parking -Fire Lane” in red letters. Fire lane sign material shall be minimum 0.080-inch thick aluminum alloy 6061-T6 with Scotchlite Engineer Grade Reflective Sheeting or an approved equivalent. Signs shall be posted on both sides of the fire apparatus road or an additional sign beneath the fire lane sign lettered as “Both Sides”. Signs shall be placed at a maximum center-to-center spacing of 50 feet on both sides of the fire lane Fire lanes shall be designated by signs posted at a minimum height of:

- 60” to the bottom of the sign when pedestrians do not pass by or under the sign. This application includes signs mounted on the building face, a column, or other fixed mounting surface.
- 84” to the bottom of the sign when the pedestrian path does pass by or beneath the sign. This application includes signs mounted on a fixed post located in a sidewalk and/or traffic/planting island.

A red thermoplastic stripe shall be placed on the pavement one (1) foot from the curb to designate the length of the fire lane or within 15 feet of each fire hydrant.

6D.06 Review

A plan which indicates all fire lanes and proposed fire lane sign placements for the project site shall be submitted for the Fire Code Official’s approval.

6E Fire Hydrants

Fire hydrant spacing, flow, and installation specifications are separately provided by the City's Water Resources Department and can be viewed by accessing the City's internet web site "www.ashevillenc.gov" or by contacting the Water Resources Department at (828) 259-5955.

6E.01 Fire Hydrants Adjacent to Parallel Parking or Within Parking Lots

When a fire hydrant is located adjacent to a street with parallel parking, there should be no parking space markings located within 15 feet either side in and should be marked with red Fire Lane - No Parking" text and striping in accordance with "Figure 6-1: Fire Hydrant Location Adjacent to Parallel Parking". For parking lots, fire hydrants should be located and marked with red Fire Lane - No Parking" text and striping in accordance with Figure 6-2: Fire Hydrant Location within Parking Lots".

Figure 6-1: Fire Hydrant Location Adjacent to Parallel Parking

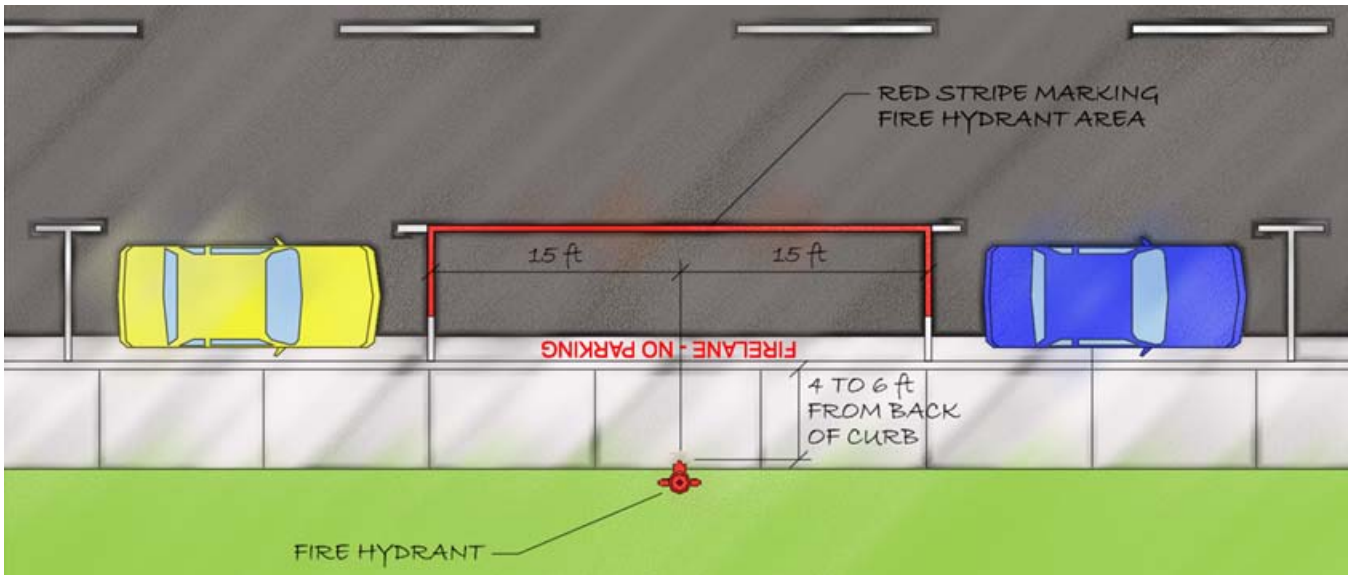

Figure 6-2: Fire Hydrant Location within Parking Lots

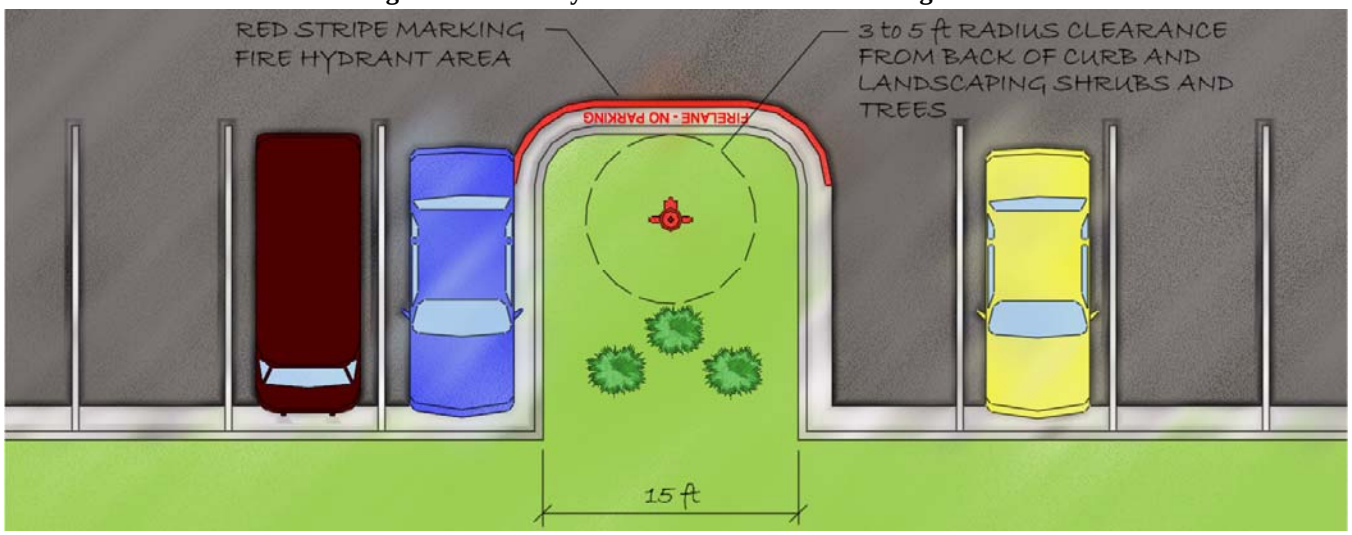

6F Fire Flow Requirements for Building

6F.01 General.

An approved water supply capable of supplying the required fire flow for fire protection shall be provided to premises upon which buildings or portions of buildings are hereafter constructed or moved into or within the jurisdiction of the City of Asheville. The procedure for determining fire flow shall be in accordance with this section. This section only applies to buildings. These requirements were derived from the International Fire and Building Code. Modifications were made to the model code requirements for practical application of water availability needs within the City of Asheville.

6F.02 Specific Terminology

For the purpose of this section, certain terms are defined as follows:

Fire Area - The fire area shall be the single largest floor area of all floor levels within the exterior walls, and under the horizontal projections of the roof of a building used to protect storage or use areas, except as modified. This area is used to determine the required fire flow.

Fire Flow - The flow rate of a water supply, measured at 20 pounds per square inch (psi) residual pressure, that is available for fire suppression.

6F.03 Types of Water Supply

Water supply shall consist of water mains, reservoirs, pressure tanks, elevated tanks, or other fixed systems capable of providing the required fire flow and duration. Other City of Asheville sections of this manual may also apply to these systems.

6F.03a Water Storage Tanks. Water storage tanks used for meeting the required fire flow and duration must comply with NFPA 22 and be designed and sealed by a licensed North Carolina Professional Engineer.

6F.03b Private Water Systems. Private water systems shall comply with the requirements of NFPA 24.

6F.04 Area Separation and Decreases

6F.04a Area Separation. Portions of buildings which are separated by fire walls rated as two hours or greater and with protected openings constructed in accordance with the Building Code are allowed to be considered as separate fire areas.

6F.04b Decreases. A reduction in required fire flow is allowed where the building is equipped throughout with an approved automatic sprinkler system. When the sprinkler system water demand and any required outside hose demand is satisfied by using either a municipal or a private water system or a combination of the two, the fire-flow requirement is considered to have been satisfied.

6F.05 Fire Flow Requirements for Buildings

6F.05a One-and Two-family Dwellings. The fire flow requirements for one-and two-family dwellings shall be 500 gallons per minute, except as modified. Flow duration for one and two-family dwellings shall not be less than 30 minutes.

6F.05b Buildings Other Than One and Two-family Dwellings. The minimum fire flow and flow duration for buildings other than one and two-family dwellings shall be as specified in Table 6-3: Minimum Required Fire Flow and Flow Duration for Non-Sprinklered Buildings, except as modified. The maximum required water supply is 3500 gpm.

Table 6-3: Minimum Required Fire Flow and Flow Duration for Non-Sprinklered Buildings

Fire Area (square feet)					Fire Flow (GPM) {a}	Flow Duration (hours)
Type IA and IB{a}	Type IIA and IIIB{a}	Type IV and V -A{a}	Type IIB and IIIB{a}	Type V-B{a}		
-22,700	0-12,700	0-8,200	0-5,900	0-3600	500	0.5
22,701-30,200	12,701-17,000	8,201-10,900	5,901-7,900	3,601-4,800	750	1
30,201-38,700	17,001-21,800	10,901-12,900	7,901-9,800	4,801-6,200	1000	1
38,701-48,300	21,801-24,200	12,901-17,400	9,801-12,600	6,201-7,700	1250	1
48,301-59,000	24,201-33,200	17,401-21,300	12,601-15,400	7,701-9,400	1500	1
59,001-70,900	33,201-39,700	21,301-25,500	15,401-18,400	9,401-11,300	1750	1
70,901-83,700	39,701-47,100	25,501-30,100	18,401-21,800	11,301-13,400	2000	2
83,701-97,700	47,101-54,900	30,101-35,200	21,801-25,900	13,401-15,600	2250	2
97,701-112,700	54,901-63,400	35,201-40,600	25,901-29,300	15,601-18,000	2500	2
112,701-128,700	63,401-72,400	40,601-46,400	29,301-33,500	18,000-20,600	2750	2
128,701-Greater	72,401-Greater	46,401-Greater	33,501-Greater	20,601-Greater	3000	3

{a} Types of construction are based on the International Building Code.
{b} Measured at 20 psi.

6G Knox Box Key Control Program

6G.01 General

The Knox Box, a proprietary system used by the Asheville Fire-Rescue Department, is a program designed to expedite entry and eliminate property damage caused by the forcible entry required for evaluation of an emergency situation, and allows the Fire Department to re-secure the building when leaving.

6G.02 Knox Box Defined

A Knox Box is a highly secure, UL listed steel vault used for the storage of entry keys and alarm panel or mechanical system keys for use only by the Fire Department. The keys to access the Knox Boxes are located in locked boxes inside the emergency response apparatus and cannot be duplicated.

6G.03 Scope

- The enforcement of use of the Knox Boxes is through the City of Asheville Fire Code, which adopted the NC Fire Code. Section 506.1 reads:

"Where access to or within a structure or an area is restricted because of secured openings or where immediate access is necessary for life-saving or fire-fighting purposes, the code official is authorized to require a key box to be installed in an accessible location. The key box shall be of an approved type and shall contain keys to gain access as required by the code official."

All buildings which contain automatic fire alarm systems or fire suppression sprinkler systems shall provide a key box and the required keys for access to the building. An important reason for this is the real possibility of an alarm occurring when the business is locked and vacant. The availability of a key allows firefighters to safely enter the building, without causing any damage, evaluate the conditions present and secure the premises.

- Your Knox Box shall be installed as designated on your fire department approved plans. If the location of the Knox Box is not indicated on the approved plans, have the fire inspector approve the location prior to installation.
- Boxes may be ordered on line at "www.knoxbox.com". Enter "28801" as the Zip Code for the Asheville Fire Department.
- The Knox Box shall be installed between 4' - 6' from the ground unless otherwise approved by the Fire Marshal.
- The Knox Box shall not be blocked from plain view by any obstructions (landscaping, etc.).
- If you are unsure or have questions, call your fire inspector prior to installing this Knox Box.
- The box will arrive unlocked from the factory so it can be installed.
- Once the Knox Box is mounted and you are ready to lock the keys in, call (828) 259-5441 to request a fire inspector to come out to lock the box.

6H Traffic Calming

6H.01 Purpose

The City of Asheville continually strives to strengthen and protect its neighborhoods by improving the quality of life in residential areas. Traffic conditions on residential streets can greatly affect neighborhood livability. Speeding traffic and unnecessary through traffic in neighborhoods create safety hazards on residential streets. When traffic problems become a daily occurrence, our sense of community and personal well-being are threatened. Consequently, the city has a Traffic Calming Policy that addresses how cut-through traffic in neighborhoods can be managed.

6H.02 Traffic Calming Types

The type of traffic calming measures that are used in a particular neighborhood or situation is determined through a public process as established in the policy. There are a variety of measures to be considered, including chicanes, diverters, speed tables, speed humps, and traffic circles. Specific measures will be designed for the circumstances in which they are used so there are no standards for these measures other than sound engineering practice except for the most common measure used in the City of Asheville, speed humps. "Standard Details 3.28: 22' Collector Street Speed Table" and "3.29: 14' Collector Street Speed Hump" illustrate speed table and hump design standards for two common collector street widths.

6I Retaining Wall Barriers

Barrier guards shall be located on any retaining wall that is more than 30 inches above grade. Guards for pedestrian protection shall be designed to resist a load of 50 psi applied in any direction at the top and to transfer this load through the supports to the structure. Guards for pedestrians shall form a protective barrier not less than 42 inches high. Horizontal intermediate rails or other construction shall not permit a sphere with a diameter

of 21 inches to pass through any opening. This may be an integrated chain link fence or other fence or cabling type application. Vehicle barriers in addition to the pedestrian guards for parking lots shall be located on any retaining wall that is more than 30 inches above the floor or grade below. Vehicle barrier systems for passenger cars shall be designed to resist a single load of 6,000 pounds applied horizontally as per the latest North Carolina State Building Code. This may be a guard rail system or a combination of wheel stops, 18 – 24 inch barriers, or bollards. Vehicle barrier systems are not required when the parking spaces are 20 feet from the retaining wall or the spaces are parallel to the retaining wall. Pedestrian guards are required for any retaining wall meeting this section.

6J Crime Prevention Through Environmental Design (CPTED) Strategies

6J.01 Purpose

Crime Prevention Through Environmental Design, or CPTED (pronounced sep-ted), is a crime prevention philosophy based on the theory that proper design and effective use of the built environment can lead to a reduction in the fear and incidence of crime, as well as an improvement in the quality of life. The best time to apply this philosophy is in the design phase, before a building or neighborhood is built. It can also be successfully applied later, but retrofitting an existing environment can sometimes be costly. The use of CPTED will reduce crime and fear by reducing criminal opportunity and fostering positive social interaction among legitimate users of space. The emphasis is on crime prevention rather than apprehension and punishment.

6J.02 The Four Strategies of CPTED from the National Crime Prevention Council

6J.02a Natural Surveillance. A design concept directed primarily at keeping intruders easily observable. Promoted by features that maximize visibility of people, parking areas and building entrances: doors and windows that look out on to streets and parking areas; pedestrian-friendly sidewalks and streets; front porches; and adequate nighttime lighting.

6J.02b Territorial Reinforcement. Physical design can create or extend a sphere of influence. Users then develop a sense of territorial control while potential offenders, perceiving this control, are discouraged. Promoted by features that define property lines and distinguish private spaces from public spaces using landscape plantings, pavement designs, gateway treatments, and CPTED fences.

6J.02c Natural Access Control. A design concept directed primarily at decreasing crime opportunity by denying access to crime targets and creating in offenders a perception of risk. Natural access control is Gained by designing streets, sidewalks, building entrances, and neighborhood gateways to clearly indicate public routes and discouraging access to private areas with structural elements.

6J.02d Target Hardening. Accomplished by features that prohibit entry or access: window locks,

6J.03 Application

The CPTED information presented in this Manual is not intended to be regulatory, but awareness-raising. During site and building design, a conscious effort to apply the four strategies listed above will create opportunities for safer design and crime reduction.

The Asheville Police Department is available to discuss CPTED design strategies for any project.

6J.04 Examples of CPTED in Action

The illustration in "Figure 6-3: Examples of CPTED" shows how limbing up trees in parking lots and keeping shrubs to a certain height creates a "window" of visibility, allowing natural surveillance to occur .

Also in "Figure 6-1: Examples of CPTED", the photographs present how parking garages can be designed to provide natural surveillance, territorial reinforcement and natural access control.

Figure 6-3: Examples of CPTED

SECTION 7 - SOIL EROSION AND SEDIMENTATION CONTROL

7A General

The City of Asheville is a delegated agency of the State to approve and regulate best management practices for soil erosion and sedimentation control measures within the City Limits in order to manage the adverse effects of sedimentation and pollutants to adjacent properties and the area's waterways by a development's stormwater run off.

Temporary and permanent erosion control measures shall be provided for all land disturbing work in accordance with an erosion control plan approved by the City of Asheville. A grading permit shall be obtained from the Development Services Department prior to construction. Temporary measures shall be installed and inspected by the City of Asheville for compliance prior to any land disturbing activity. All permanent erosion control measures shall be incorporated into the work at the earliest practical time. All temporary measures shall be maintained until the permanent measures have taken effect. Temporary and permanent measures shall be coordinated to provide effective and continuous erosion control throughout the construction and post-construction period to prevent offsite sedimentation. These measures shall remain in effect until final approval is given by the City of Asheville.

7B Temporary Erosion Control Measures

Examples of temporary erosion control measures include but are not limited to the following:

7B.01a Silt Fence. Prior to construction beginning, silt fence must be installed down slope of all disturbed areas and any other necessary locations as directed by the Public Works Department. Silt fence shall be erected in accordance with "Standard Detail 7.01: Standard Temporary Silt Fence".

7B.01b Silt Fence Reinforced Stabilized Outlet. In locations where sediment laden runoff may overtop a Standard Temporary Silt Fence and create further erosion, incorporate a reinforced stabilized outlet into the silt fence in accordance with "Standard Detail 7.01A: Silt Fence Reinforced Stabilized Outlet".

7B.01c Construction Entrance. A construction entrance shall be installed at all points of access to construction sites. Any access point which does not have a construction entrance shall be barricaded to prevent its use. Construction entrances shall be installed in accordance with "Standard Detail 7.02: Residential Construction Entrance" or "7.03: Commercial Construction Entrance". The contractor shall be responsible for maintaining the cleanliness of existing sidewalks and streets impacted by construction activities.

7B.1d Sediment Basins. A sediment basin is an earthen embankment suitably located to capture sediment. Unless the basin is designed to be converted to a stormwater pond it shall have a lifespan of three years or less. Sediment basins can be used for drainage areas up to 100 acres in size. Dewatering of sediment basins shall be accomplished by either a skimmer, flashboard riser, or other methods approved by the City of Asheville or NCDENR. Perforated corrugated metal pipe risers shall not be accepted. The volume of a sediment basin shall be determined on the basis of 1,800 cubic feet of basin volume per acre of disturbed area. Do not locate sediment basins in intermittent or perennial streams. Sediment basins shall be installed in accordance with "Standard Detail 7.09: Skimmer Sediment Basin".

7B.01e Sediment Traps. A sediment trap is a small temporary ponding basin formed by an embankment or excavation to capture sediment. A sediment trap shall be used two years or less and can be used for drainage areas up to five (5) acres in size. Dewatering of sediment traps shall be accomplished by a stone spillway. The

volume of a sediment trap shall be determined on the basis of 3,600 cubic feet of trap volume per acre of disturbed area or in accordance with the most current version of the Erosion and Sediment Control Manual. Do not locate sediment basins in intermittent or perennial streams. Sediment traps shall be installed in accordance with "Standard Detail 7.08: Temporary Sediment Trap".

7B.01f Check Dam and Wattle. Check dams are small stone dams and wattles are tubular shaped straw or coir (coconut fiber) filled fabric dams constructed across a drainage way. Both practices may be used as a temporary measure to limit erosion by reducing velocity in small open channels. When needed, they can be used in channels, roadside ditches and temporary diversions. The drainage area is limited to one half acre. Do not use check dams in intermittent or perennial streams. Check dams and wattles shall be installed in accordance with "Standard Details 7.06: Check Dam" and "7.05: Wattle Detail".

7B.01g Inlet Protection. Inlet protection must be placed in accordance with the "Standard Detail 7.11: Standard Catch Basin Inlet Protection" or "7.11A: Block and Gravel Inlet Protection" at all structures.

7B.01h Temporary Seeding. Temporary seeding is the use of rapid growing annual grasses, small grains, or legumes to provide initial, temporary ground cover for erosion control on disturbed areas for less than 12 months. Seed bed preparations and soil amendments shall be in accordance with the method described under "Seeding and Mulching".

7B.01i Seeding and Mulching. Seeding and mulching shall be applied immediately following the completion of any phase of grading. All disturbed areas shall be dressed to a depth of five (5) inches. The top two (2) inches shall be pulverized to provide a uniform seedbed. Agricultural lime shall be applied at the rate of 95 lbs./1000 sq. ft. immediately before seed bed preparation. Grass seed shall be applied at the rates outlined in "Table 7-1: Seeding and Mulching". 5-10-10 fertilizer shall be applied to all disturbed areas at a rate of 21 lbs./1000 sq. ft. Mulching shall consist of small grain straw applied at a rate of 70 lbs./1000 sq. ft. Mulched areas shall be tacked with an approved method sufficient to hold the straw in place. Refer to Chapter 3 of the North Carolina Department of Environmental and Natural Resources (NCDENR) Erosion and Sedimentation Control Planning and Design Manual for more details concerning seeding and mulching procedures. If active construction ceases in any area for more than 14 days, ground cover is required to all disturbed as described in "Appendix C: Ground Cover".

Table 7-1: Seeding and Mulching

Seeding Area, Dates & Types				
Area Type	**Seeding Dates & Types**			
	August 1 - June 1		**May 1 - September 1**	
	lbs/acre	**Seed Type & Fertilizer**	**lbs/acre**	**Seed Type & Fertilizer**
Shoulders and Median	20	Kentucky Blue Grass	20	Kentucky Blue Grass
	75	Hard Fescue	75	Hard Fescue
	25	Rye Grain	10	German or Blowtop Millet
	500	Fertilizer	500	Fertilizer
	4000	Limestone	4000	Limestone
Areas Beyond the Mowing Pattern, Waste, and Borrow Areas	100	Tall Fescue	100	Tall Fescue
	15	Kentucky Blue Grass	15	Kentucky Blue Grass
	30	Hard Fescue	30	Hard Fescue
	25	Rye Grain	10	German or Blowtop Millet
	500	Fertilizer	500	Fertilizer
	4000	Limestone	4000	Limestone

Table 7-1: Seeding and Mulching" continued on next page.

Table 7-1: Seeding and Mulching (continued)

Approved Cultivars					
Cultivar Type	**Cultivar Names**				
Tall Fescue	2nd Millennium	Coyote	Inferno	Olympic Gold	Signia
	Avenger	Davinci	Justice	Padre	Silverstar
	Barlexas	Dynasty	Jaguar 3	Paraiso	Southern Choice II
	Barlexas II	Dominion	Kalahari	Picasso	Stetson
	Barrera	Duster	Kentucky 31	Piedmont	Tarheel
	Barrington	Endeavor	Kitty Hawk	Pure Gold	Titan Ltd
	Biltmore	Escalade	Kitty Hawk 2000	Prospect	Titanium
	Bingo	Falcon II, III, IV & V	Lexington	Quest	Tomahawk
	Bravo	Fidelity	Magellan	Rebel Exeda	Tacer
	Cayenne	Finesse II	Masterpiece	Rebel Sentry	Trooper
	Chapel Hill	Firebird	Matador	Regiment II	Turbo
	Chesapeake	Focus	Matador GT	Rembrandt	Ultimate
	Constitution	Grande II	Millennium	Rendition	Watchdog
	Chipper	Greenkeeper	Montauk	Scorpion	Wolfpack
	Coronado	Greystone	Mustang 3	Shelby	
Kentucky Bluegrass	Alpine	Award	Champagne	Midnight	Showcase
	Apollo	Bariris	Chicago II	Midnight II	Sonoma
	Arcadia	Bedazzled	Envicta	Rugby	
	Arrow	Bordeaux	Impact	Rugby II	
Hard Fescue	Chariot	Kenblue	Oxford	Rhino	Stonehenge
	Firefly	Minotaur	Reliant II	Scaldis II	Warwick
	Heron	Nordic	Reliant IV	Spartan II	

On cut and fill slopes greater than 2:1 erosion control matting shall be installed.

Fertilizer shall be 10-20-20 analysis. A different analysis of fertilizer may be used provided the 1-2-2 ratio is maintained and the rate of application adjusted to provide the same amount of plant food as a 10-20-20 analysis and as directed.

Note: Consult Soil Conservation Service for additional information concerning other alternatives for vegetation of denuded areas. The above vegetation rates are those which do well under local conditions.

Temporary Seeding: Fertilizer shall be the same analysis as specified for Seeding and Mulching and applied at the rate of 400 pounds and seeded at the rate of 50 pounds per acre. German Millet or Browntop Millet shall be used in summer months and rye grain during the remainder of the year. The Engineer will determine the exact dates for using each kind of seed.

Fertilizer Topdressing: Fertilizer used for topdressing shall be 16-8-8 grade and shall be applied at the rate of 500 pounds per acre. A different analysis of fertilizer may be used provided the 2-1-1 ratio is maintained and the rate of application adjusted to provide the same amount of plant food as 16-8-8 analysis and as directed.

Supplemental Seeding: The kinds of seed and proportions shall be the same as specified for Seeding and Mulching, and the rate of application may vary from 25 to 75 pounds per acre. The actual rate per acre will be determined prior to the time of topdressing and the Contractor will be notified in writing of the rate per acre, total quantity needed, and areas on which to apply the supplemental seed. Minimum tillage equipment, consisting of a sod seeder shall be used for incorporating seed into the soil as to prevent disturbance of existing vegetation. A clodbuster (ball and chain) may be used where degree of slope prevents the use of a sod seeder.

Mowing: The minimum mowing height shall be six inches.

7C Permanent Erosion Control Measures

7C.01 Types of Permanent Measures

Examples of permanent erosion control measures include but are not limited to the following:

7C.01a Ground Cover. After construction is complete, all disturbed areas shall receive a permanent ground cover in accordance with the seeding and mulching schedule in Table 7-1: Seeding and Mulching. Permanent seeding and temporary seeding differ only in the type of seed to be used - annual versus perennial.

7C.01b Mulch. Mulch is a temporary ground cover intended to provide temporary erosion prevention and promote growth of vegetation. Mulch may only be used as a permanent ground cover in the beds of installed landscaping with an accompanying landscaping plan and for land disturbance activities that are exempt from provisions of the erosion prevention and sediment control regulations as specified in the Unified Development Ordinance.

7C.01c Disturbed Stream Buffers. All areas disturbed within the vegetated buffer of intermittent and perennial streams shall receive permanent ground cover and/or buffer re-vegetation as specified herein.

7C.01d Permanent Ground Cover. Permanent Ground Cover is the establishment of perennial vegetation cover for periods longer than 12 months. Seed bed preparations and soil amendments shall be in accordance with "Table 7-1: Seeding and Mulching". As a part of permanent seeding, maintenance may be required to maintain vegetative growth for 12 months. This maintenance shall be considered a part of establishing permanent ground cover.

7B.01e Energy Dissipaters. All Energy dissipater shall be designed and installed in accordance with Section 8 - Stormwater.

7D Computations

7D.01 Scope

All computations and assumptions used to formulate an erosion control plan shall be reviewed by the City Engineer or his/her designee and in compliance with the applicable City Ordinances to verify their sufficiency.

Erosion and sedimentation control measures, structures, and devices shall be planned, designed, and constructed to control the calculated peak runoff from a 10-year frequency storm. Steep slopes construction may require a higher design standard. Runoff rates shall be calculated using the United States Department of Agriculture (USDA) Natural Resources Conservation Service (NRCS) Method, the Rational Method, or other acceptable calculation procedures. Runoff computations shall be based on rainfall data published by the NCDENR Erosion and Sedimentation Control Planning and Design Manual for this area. The Rational Method may be used for drainage areas up to 20 acres (for stormwater calculation purposes the NRCS method must be utilized).

7E Construction Sequence

The construction sequence on projects shall include the following essential criteria or equivalent sequence in the priority shown below:

1. Submit plans for review;
2. Obtain grading permit (may include preconstruction conference);
3. Submit four (4) copies of stormwater component shop drawings at or prior to the preconstruction meeting and receive approval by the City of Asheville prior to ordering materials.
4. Install all erosion control measures as shown;
5. On-site inspection by Inspector to approve perimeter erosion control devices;
6. Proceed with grading;
7. Clean sediment basins when one-half full;
8. Repair or replace all erosion control measures as needed;
9. Seed and mulch denuded area, as required, after finished grades are established;

10. Maintain soil erosion control measures until permanent ground cover established;
11. Request final approval by Construction Inspector; and,
12. Remove all temporary soil erosion control measures and stabilize these areas.

7F Formal Plan Submittal Requirements

See "Appendix C: Requirements for Formal Grading, Erosion Control, and Stormwater Plans.

7G As-Built and Closeout Document Requirements

As-builts or closeout documents shall not be required provided the project does not include the installation of storm drainage piping or stormwater detention/retention facilities. If storm drainage piping or stormwater facilities are included see "Section 8" for as-built record drawing and closeout document requirements.

SECTION 8 - STORMWATER

8A General

Stormwater management and conveyance devices are essential components of development projects. Stormwater management devices are necessary to provide key water quality components. Water quality prevents contamination of local waterways and provides improvements to aquatic life. These devices also reduce the risk of flooding and aid in the replenishment of local groundwater.

8B Storm Drains

8B.01 Location

- All public storm drains shall be installed in dedicated street right of way or dedicated storm drain easements. Minimum widths of storm drain easements shall be 20 feet for pipes up to and including 48 inches in diameter and 30 feet for pipes greater than 48 inches in diameter. Pipes shall be centered and locatable in easement.
- Horizontal and vertical separation requirements between storm drainage pipe, water lines, and sanitary sewer lines shall meet the requirements established by "Section 5 - Utilities" of this manual.
- The City of Asheville shall maintain only the storm drain systems within City maintained rights of way and on City owned property, unless an easement has previously been offered and maintenance responsibility officially accepted by the City. Storm drainage systems located on private property shall be maintained by the property owner(s).
- Unless prevented by topographic constraints, stormwater systems shall not discharge into front yards of lots, but shall extend to within a minimum of 20 feet of the rear property line in lots up to 1/2 acre in size and shall extend a minimum of 150 feet from right of way in lots larger than 1/2 acre. The pipe outlet, including energy dissipaters shall be a minimum of 10 feet from any structure and/or property lines.
- Pipes, drains, flumes or other concentrated stormwater devices shall not discharge across a sidewalk, but rather shall be piped or flumed under the sidewalk.
- Drainage systems that are located within a 10-foot perimeter of a structure must be inspected by the Building Safety Department.
- Storm drain systems that cross from private property to a public right-of-way or designated storm drain easement shall contain a drainage structure at the right-of-way or easement line to designate the area of responsibility for future maintenance of the storm drain system.

8B.02 Pipe Materials

8B.02a Minimum Size. The minimum size of all storm drain pipes in public rights-of-way shall be 18-inches. The minimum size of all other storm drain pipes shall be 15-inches.

8B.02b Reinforced Concrete Pipe. RCP shall be as per most current American Society for Testing and Materials (ASTM). Joints shall be sealed meeting North Carolina Department of Transportation standards (NCDOT).

8B.02c Corrugated Metal Pipe (CMP) or Pipe-Arch. CMP shall conform to American Association of State Highway and Transportation Officials (AASHTO) with pipe ends having no less than two (2) round corrugations on each end. Bands for connecting pipes shall be coated and corrugated with a minimum of two (2) corrugations for each pipe. Pipe shall be fully bituminous coated with an asphalt paved invert in accordance with the requirements of NCDOT for Type C pipe.

8B.02d Pipe Location Devices. Storm drain pipes shall be locatable with locator tape or equivalent methods approved by the City of Asheville, similar to the devices used for locating buried non-metalic water and gas lines, or as shown on "Standard Detail 8.06: Storm Drain Pipe Location Devices".

8B.02e High Density Polyethylene Corrugated Pipe (HDPE) shall conform to the requirements of AASHTO M-294, Type S. HDPE pipe may be installed within the right-of-way under any pavement or curb and gutter, provided it is installed according to manufacture guidelines.

8B.02f Other Pipe Materials. Piping materials currently approved by North Carolina Department of Transportation (NCDOT) may be considered by the City Engineer or his/her designee. Other piping material may be reviewed on a case by case basis.

8B.03 Structure Materials

All storm drainage structures such as manholes, inlets, junction boxes, catch basins, endwalls and headwalls shall be constructed of solid brick, solid block, or precast concrete meeting NCDOT standards. Any structure with a depth greater than 4 feet shall have steps installed. All hoods, frames, and grates shall be domestically produced cast iron or steel and approved by NCDOT.

8B.03a Manhole / Structures Steps. Steps shall be of polypropylene material reinforced with a 1/2 inch diameter reinforcing rod. They shall be designed for a vertical load of 400 pounds and a horizontal pullout load of 1000 pounds, and shall be set 12 inches on center. Holes for the installation of manhole steps shall not project through the manhole wall, but shall stop a minimum of one inch from the outside wall. Steps shall be at least 10 inches clear width and shall project at least 4 inches from the wall into which they are embedded. Steps in precast concrete structures shall be installed by the manufacturer. Any structure with a depth greater than 4 feet shall have steps installed that meet NCDOT standards.

8B.03b Curb Inlets, Yard Inlets, and Catch Basins. Curb inlets for street drainage shall be in accordance with Standard Detail 8.03 and 8.03A Precast Concrete Catch Basins. Precast concrete boxes are allowed and precast manholes are will be considered by the City Engineer or his/her designee on a case-by-case basis. A precondition for the use of round structures is providing adequate access and steps. All curb inlet grates and parking lot catch basins shall be the bicycle safe type.

8B.03c Landscaping Yard Inlets. Landscaping yard inlets will be considered on a case by case basis and permit submittals shall include a design plan and accompanying design calculations.

8B.03d Headwalls and Endwalls. Headwall and endwalls may be cast in place per NCDOT Standard Drawings, or precast with wing walls and apron by an approved manufacturer. Installation of precast headwalls and endwalls shall be in accordance with the manufacturer's recommended installation procedures and specifications.

8B.04 Sizing and Design

- Public and private storm drain systems shall be designed on the basis of the 10-year storm for inlet spacing, the 25-year storm for drainage pipe sizing, the 50-year storm for cross-street drainage, and the 100 year storm for flood plain areas. Pipes shall be designed at full flow with a maximum allowable capacity 7/8 full.
- Runoff rates shall be calculated by the Rational Method, Natural Resource Conservation Service (NRCS) Method, or other acceptable procedure. Runoff computations shall be based on rainfall data published by the North Carolina Department of Environment and Natural Resources (NCDENR) "Erosion and Sediment Control Planning and Design Manual" (hereafter referred to as "NCDENR Erosion Control Manual").

- For drainage areas of 20 acres or less, the Rational Method is recommended to calculate runoff. For drainage areas greater than 20 acres use the NRCS Method.
- Time of concentration (Tc) shall be determined by a method that is approved by NCDENR.
- Storm duration shall equal the time of concentration (Tc).
- Storm drain pipe shall be sized in accordance with the Manning Equation.
- Storm drains shall be designed to provide a velocity of at least 2 feet per second at design flow and no more than 15 feet per second.
- The minimum pipe diameter shall be 15 inches for private structures and 18 inches within the public right of way.

8B.05 Installation

- All stormwater pipes shall be installed to provide a true line and grade between structures.
- Structures shall be installed at each deflection of line and/or grade.
- The maximum length between access points shall be 250 feet.
- No inaccessible storm drainage structures shall be allowed.
- Pipe may enter through the corner of all structure material types except precast concrete "waffle" boxes.
- A reinforced concrete slab designed by an engineer may be used at oversized structures to adjust an inlet to standard dimensions.
- The minimum cover for pipe shall be two (2) feet to finished subgrade under roads and 1 foot to finished grade under nonload-bearing areas or as specified by the manufacture. Trench excavation and backfilling shall be in accordance with the Pipe Trench section of these specifications.
- Pipe shall not project into a drainage structure but shall be finished flush with the inside of the structure.
- Each drainage structure shall have a shaped invert constructed from concrete, and a bench with a maximum 5:1 slope. The bench shall begin at a height of one-half the pipe diameter for 15 to 24 inch pipe, one-third the pipe diameter for 30 to 48 inch pipe, and one-fourth the diameter for pipe greater than 48 inches in diameter.
- Precast concrete structures may be installed only to depths certified as acceptable by the manufacturer. Installation of pipes and structures shall be in accordance with latest OSHA standards. In order to protect City infrastructure during, trenches deeper than 4 feet located adjacent to a roadway may require positive shoring.

8B.06 Pipe Inlets and Outlets

- Headwalls, endwalls or flared end sections may be installed at all inlets and discharge points.
- Flared end sections shall be installed on single pipe culverts up to and including 36 inches in diameter. Multiple pipe culverts up to and including 36 inches must use headwalls and endwalls.
- Precast headwalls shall only be installed at single pipe culverts.
- Approved Energy dissipaters shall be installed at all discharge points and shall be properly sized to ensure that stormwater is released at a non-erosive velocity.
- A fabric and washed stone barrier shall be installed between the dissipation pad and the natural ground. #57 stone is the minimum acceptable size stone allowed in this application.
- The stormwater design shall include scour protection for the drainage way as provided for the design specifications in the Open Channel Drainage Way section of this manual.
- The City Engineer or his/her designee may require additional information on the impact of stormwater discharge on adjacent properties.

8B.07 Street Drainage

- Stormwater shall not be allowed to flow across streets at intersections. Drainage structures shall be provided to intercept flow prior to the radius of intersections or the street design shall provide for a continuous grade

to intercept flow prior to the radius of intersections or the street design shall provide for a continuous grade around the radius to channel flow down the intersecting street.

- Stormwater inlets shall not be placed within travel areas of a public roadway unless design cannot accommodate relocation in which cases the City Engineer or his/her designee must approve.
- Curb inlets shall be designed to intercept stormwater before the gutter spread exceeds six (6) feet for the two (2) year storm.

8B.08 Runoff Quantity for Pipe Sizing

Runoff quantities shall be computed for the area of the parcel under development plus the area of the watershed flowing into the parcel under development. The quantity of runoff generated as the result of a given rainfall event must be calculated as indicated in the NCDENR Erosion Control Manual.

- For total drainage areas up to and including 20 acres the Rational Method may be used. Rainfall intensity shall be determined from Intensity Duration Frequency tables in the NCDENR Erosion Control Manual.
- The runoff rate for areas in excess of 20 acres must be determined by the NRCS method, as indicated in the NOAA Hydrographs or per NCDENR Erosion Control Manual.

All storm drains, whether private or public, and whether constructed on private or public property shall conform to the design standards and other requirements contained herein.

8B.08a Manning Equation. Storm drainage pipe size must be designed to meet or exceeds its hydraulic capacity by using the Manning Equation as follows:

$$V = \frac{1.486}{n} R^{2/3} S^{1/2}$$

V = Mean velocity of flow in feet per second. **R** = the hydraulic radius in feet.
S = the slope of the energy grade line in feet per foot. **n** = roughness coefficient.

The hydraulic radius, "R" is defined as the cross sectional area of flow divided by the wetted flow surface or wetted perimeter. For typical Manning's "n" values use "Table 8-1: Permissible Manning's Coefficients for Storm Drainage Materials".

Table 8-1: Permissible Manning's Coefficients for Storm Drainage Materials

Type	Material	Mannings "n"
Closed Conduits	Concrete	0.013
	Cast Iron	0.013
	Corrugated Metal Pipe	0.024
	High Density Polyethylene (HDPE)	0.011
Open Channels	Concrete, Trowel Finish	0.013
	Concrete, Broom or Float Finish	0.013
	Gunite	0.018
	Rip Rap Placed	0.035
	Rip Rap Dumped	0.035
	Gabion	0.028
	New Earth (Uniform, Sodded, Clay)	0.025
	Existing Earth (Fairly Uniform, with some Weeds)	0.030
	Dense Growth of Weeds	0.040
	Dense Weeds and Brush	0.040
	Swale with Grass	0.035
Note: The values reflect common industry standards and applications as derived from multiple sources.		

8B.08b Grade. Storm drainage grade must have uniform slopes which shall be maintained between inlets, manholes and inlets to manholes. Final grade must be set with full consideration of the capacity required, sedimentation problems and other design parameters. Minimum and maximum allowable slopes shall be those capable of producing velocities of 2 feet per second and 15 feet per second, respectively, when the drainage system is designed for full flow with a maximum allowable capacity of in the proposed pipe of 7/8 full flow. A minimum of five tenths percent (0.5%) grade for self cleaning must be provided.

8B.08c Alignment. Storm drains must be straight between junction boxes.

8B.08d Junction Boxes. Junction boxes shall be installed to provide access to continuous underground storm drains for the purpose of inspection and maintenance. Precast concrete junction boxes shall have a monolithic extended concrete base. Junction boxes must be constructed with a minimum of four thousand (4,000) psi concrete. Inverts shall be formed to provide a definite channel of flow through the structure. Junction boxes must be provided at the following locations:

- Where two or more storm drains converge.
- At the point of beginning or at the end of a curve, and at the point of reverse curvature.
- Where pipe size changes.
- Where an abrupt change in alignment occurs.
- Where a change in grade occurs.
- At suitable intervals in straight sections of storm drains.

8B.08e Inlets drainage structures. Inlet structures shall be used to collect surface water through grated openings and convey it to storm drains, channels or culverts. Curb inlets must be located such that the gutter flow spread does not exceed 6 feet during a 2 year storm event with a maximum spacing of 250 feet. When installed with rolled or valley curb, inlets shall not be spaced more than 150 feet unless stormwater calculations indicate a greater spacing (see Section 3 for conditions of where rolled or valley curb can be used). Curb inlets must be located at all low points to prevent ponding water. Curb inlets shall be located on the upstream sides of intersecting streets to prevent flow across the intersecting street. No curb inlets shall be constructed in the radius of curbing at intersections.

8B.08f Special Hydraulic Structures. Special hydraulic structures required to control the flow of water in storm runoff drainage systems include junction chambers, drop manholes, stilling basins, and other special structures. The use of these structures shall be limited to those locations approved by the City Engineer or his/her designee.

8B.08g Private Easements. For underground storm drain pipes, the minimum width of the easement shall be not less than 20 feet for pipe sizes up to and including 48 inches and 30 feet for pipe sizes greater than 48 inches in diameter or as required for access for any pipe that is deeper than 10 feet.

8B.08h Bedding. Excavation for storm drainage pipe shall be to the lines and grades as shown on the plans. The bedding shall provide a firm foundation uniform density along the entire length of pipe. Where unstable soils are encountered, a minimum 6-inch thick bedding of stone shall be placed. The bedding material must be ABC stone, ABCM stone, or washed stone.

8B.09 Open Channel Design Standards.

All open channels, whether private or public, and whether constructed on private or public land, shall conform to the design standards and other design requirements contained herein. Open channels must be capable of handling the 10 year storm frequency. Where adequate storm drainage is provided by means of properly constructed and graded channels or ditches the maintenance thereof will remain the responsibilities of the property owner and must be so noted on the final plat and the deed for the affected lots.

property owner and must be so noted on the final plat and the deed for the affected lots. Open channels must be designed according to the latest version of the NCDENR Erosion Manual.

8B.09a Manning Equation. Open channels must be designed to meet or exceeds its hydraulic capacity by using the Manning Equation as follows:
A = Waterway cross sectional area of channel in square feet. **Q** = Discharge in cubic feet per second (cfs).

$$Q = AV = A \frac{1.486}{n} R^{2/3} S^{1/2}$$

R = Hydraulic radius. **S** = Slope. **n** = Roughness coefficient. **V** = Velocity.

8B.09b Channel Cross Section and Grade. The channel grade shall be such that the velocity in the channel is high enough to prevent siltation but low enough to prevent erosion. Velocities less than 1.5 feet per second should be avoided since siltation will take place and ultimately reduce the channel cross section. The maximum permissible velocities in vegetation lined channels are shown in "Table 8-2: Maximum Allowable Design Velocities for Vegetative Channels". Developments through which the channel is to be constructed must be considered in design of the channel section. Refer to "Table 8.05 in the NCDENR Erosion Manual".

Table 8-2: Maximum Allowable Design Velocities for Vegetative Channels*

Typical Channel Slope Application	Soil Characteristic**	Grass Lining	Permissible Velocity*** for Establish
0-5%	Easily Erodible, Non Plastic (Sands & Silts)	Bermuda Grass	5.0
		Tall Fescue	4.5
		Bahiagrass	4.5
		Kentucky Bluegrass	4.5
		Grass Legume Mixture	3.5
	Erosion Resistance, Plastic (Clay Mixes)	Bermuda Grass	6.0
		Tall Fescue	5.5
		Bahiagrass	5.5
		Kentucky Bluegrass	5.5
		Grass Legume Mixture	4.5
5-10%	Easily Erodible, Non Plastic (Sands & Silts)	Bermuda Grass	4.5
		Tall Fescue	4.0
		Bahiagrass	4.0
		Kentucky Bluegrass	4.0
		Grass Legume Mixture	3.0
	Erosion Resistance, Plastic (Clay Mixes)	Bermuda Grass	5.5
		Tall Fescue	5.0
		Bahiagrass	5.0
		Kentucky Bluegrass	5.0
		Grass Legume Mixture	3.5
>10%	Easily Erodible, Non Plastic (Sands & Silts)	Bermuda Grass	3.5
		Tall Fescue	2.5
		Bahiagrass	2.5
		Kentucky Bluegrass	2.5
	Erosion Resistance, Plastic (Clay Mixes)	Bermuda Grass	4.5
		Tall Fescue	3.5
		Bahiagrass	3.5
		Kentucky Bluegrass	3.5

Source: United States Department of Agriculture—Soil Conservation Service , Modified
* *Permissible Velocity based on 10 year peak runoff*
** *Soil erodibility based on resistance to soil movement from concentrated flowing water.*
*** *Before grass is established, permissible velocity is determined by the type of temporary liner used.*

8B.09c Side Slopes. Earthen channel side slopes must not exceed 2:1. Flatter slopes may be required to prevent erosion and for ease of maintenance. Any side slopes steeper than 2:1 The slope liner material must be engineered and approved by the City Engineer or his/her designee.

8B.09d Disposition of Spoil. Disposition of spoil material resulting from clearing, grubbing and channel excavation shall be disposed of in a properly approved manner meeting the requirements of the NCDENR Erosion Manual.

8B.09e Construction and Materials. Construction Specifications shall be in keeping with the following standard and shall describe the requirements for proper installation. Materials acceptable for use as channel lining are:

- Grass
- Concrete
- Rolled erosion control products
- Other materials as approved by the City Engineer or his/her designee

8B.09f Easements. Where open improved drainage channels are used, adequate widths for maintenance access is required. The minimum width of the easement shall include the following:

- Three feet measured from the top of the slope of the channel on one side.
- Ten feet measured from the top of the slope of the channel on the opposite side.

8C Stormwater Management

8C.01 Stormwater Control Measures

Stormwater Control Measures (SCM) also referred to as stormwater Best Management Practices (BMP) are stormwater management devices specifically intended to reduce the peak runoff rate ("quantity control") and remove pollutants ("quality control"). They shall be designed and constructed as described in this manual and in accordance with the latest design standards established by the NCDENR Stormwater BMP Manual or, upon approval (currently pending), by the Stormwater Minimum Design Criteria (MDC), or by other superseding design Manuals.

8C.02 Design for Stormwater Quantity Control

8C.02a Design Storm. The system shall be designed to limit the two-year and ten-year developed peak discharge rates to pre-developed peak discharge rates using a duration of 24-hours with an NRCS Type II design storm. The system shall be designed to pass the 50-year, 24-hour event (except in flood fringe areas where the system must pass the 100-year, 24-hour event).

8C.02b Stage Discharge. For appropriate equations for outflow structures and when each equation is the limiting factor see the North Carolina Erosion and Sediment Control Planning and Design Manual.

8C.02c Storm Routing. Use NRCS TR-20 method of routing. The TR-55 routing method may be used for preliminary design of smaller basins.

8C.03 Design for Stormwater Quality Control

The design of Stormwater quality control devices is based on retaining the first (1)-inch of runoff from a storm for a sufficient period of time to settle out suspended solids and attached pollutants (such as metals, organics, and nutrients). Biological treatment also occurs. The first one (1) inch of rainfall shall be detained in accordance with the design criteria of the storm water control measure to be used. The first 1-inch of rainfall must be

calculated by the Simple Method or as allowed by the most current BMP manual. In addition to this requirement the City requires 85% total suspended solids (TSS) removal.

In addition to proper design, the BMPs must be routinely maintained to satisfy long-term water quality goals. A key to any maintenance program is the allocation of adequate funding and the designation of the responsible party. An Operation and Maintenance agreement must be executed by the owner and the City of Asheville and must be recorded with the Buncombe County Register of Deeds. All associated fees are the responsibility of the property owner(s).

8C.04 Retention and Detention Basin Design

All stormwater devices shall be designed, sealed, and certified that they are built as designed by a N.C. registered professional engineer or landscape architect. Retention and detention facilities shall be designed in accordance with the latest BMP manual. In addition, the following guidelines shall be followed:

- The City shall receive, for all stormwater impoundments, design calculations including, but not limited to, hydrographs, routing and outlet sizing.
- Side slopes shall be no steeper than 3:1 and no flatter than 10:1.
- Outlet control structure shall be concrete, and the riser shall be located in or near the embankment.
- The outlet control structure shall be covered with a trash rack to prevent clogging.
- Where applicable, a maintenance access shall be provided via a minimum 10 foot wide road in a minimum 20 foot wide maintenance access easement or public right of way and shall be free of trees. The road shall be adequate to withstand heavy equipment. The access road shall not cross the emergency spillway, and shall have a maximum slope of 5:1.
- Where applicable, the design shall include a minimum 20 foot maintenance easement around the perimeter of the basin and dam structure.
- Sediment from clean out shall be disposed of at an approved location.
- The outlet channel shall be protected by an appropriately designed velocity dissipater. Outlet channels between the basin outlet and the discharge stream shall be designed to prevent erosion, siltation and standing water.
- The embankment shall allow for a minimum one (1) foot freeboard.
- Anti-seep collars may be required around the barrel and a core trench shall be installed under the embankment to key it to the substrate.
- Retention facilities may be used as erosion control devices during construction upon approval by the City Engineer or his/her designee.
- Access to the basin can be prevented by a six foot high chain link fence with a locked entrance gate. Gate is to be wide enough to allow mowing and maintenance equipment to enter the site. A minimum distance of 25 feet between the pond edge and fence is needed to permit future de-silting operations. However, one objective of detention basin design could be to eliminate the need to fence the final facility. Fencing limits any multiple use and aesthetic value the detention basin may have had. The key to not fencing detention facilities is the design of specific safety measures to make basins reasonably safe under the full range of storm water conditions it is likely to encounter. A safety ledge and a flat shore line (4:1) are recommended as a minimum in addition to a maximum depth in the basin of 4 feet in order to not provide a fence around the detention basin.
- Vegetation and stabilization of Stormwater management facilities shall be in accordance with the NCDENR BMP Manual.
- The outlet control must be capable of handling the 50-year discharge.
- The control structure release rate shall be based upon the pre-development peak runoff rates for the two (2) year and 10 year storms.

- If the basin is used as a sediment trap during construction, make sure all sediment deposited during construction is removed before normal operation begins.
- Facilities that use or produce oil or grease may be required to install an oil and grease separator and connect to the sanitary sewer system.
- For wet basins, an emergency drain (with a pipe sized to drain the pond in less than 24 hours) shall be installed in all ponds to allow access for riser repairs and sediment removal.

8C.06 Dry Detention Basin Design

- A grassed or concrete lined low flow channel is to be constructed across the basin from the inlet to the outlet structure so that the basin contains no standing water five days after the end of a storm.
- Each inlet must be protected to prevent soil erosion from forming a pocket.
- The entire basin is to be sloped towards the outlet and towards the low flow channel. On a grassed floor a 1.5 to 2.0 percent slope is needed.
- A grassed floor must be on soil firm enough to support the weight of mowing equipment.
- The outlet control must be capable of handling the 50-year discharge.
- Stormwater shall be routed via grassed waterways or pipes to the upper part of the basin to reduce short circuiting and obtain maximum detention time and settling.
- An emergency spillway shall be provided to route storms at or above the 50 year storm event.

8C.06a Dam Safety Act. Any dam or impoundments that meets or exceeds the requirements of DENR shall contact or as described by NCDENR, Dam Safety Section of Land Resources (828-296-4500) who will review and approve any impoundments. Please provide the City of Asheville with a copy of the necessary permits.

8C.07 Underground Storage

If surface basins are not feasible, underground storage may be necessary. Underground storage can be accomplished by installation of a storage facility under a parking or vegetated area. The underground storage facility shall be required to have appropriate access to allow for its maintenance. The storage facility shall also be required to have all joints properly sealed to prevent undermining of the structures.

When storage is used within a pipe system all pipes shall have sealed joints. The use of o-rings on reinforced concrete pipe or neoprene gaskets for coupling on fully coated corrugated metal pipe is necessary. The minimum slope on any underground storage structure is 0.5%. Slopes less than 0.5% will only be allowed on a case by case basis with supporting documentation.

8C.08 Proprietary Quality Control Devices

Proprietary Devices will be reviewed on an individual basis for compliance with the quality control standards and approved by the City Engineer or his/her designee.

8C.09 Pervious Pavements

All persons building within the jurisdiction of the City of Asheville are encouraged to use pervious pavements in areas that either provide sufficient percolation of surface water or have an approved detailed design to account for drainage from the site. The use of pervious pavements allows a lower curve number in the design for stormwater calculations. Pervious pavements in conjunction with underground storage may be used to meet part of the requirements for stormwater quantity. Consideration for stormwater quality improvements may be given. Detailed engineering analysis must be provided and approved to obtain this credit for stormwater management.

These will be reviewed on a case by case basis and approved by the City Engineer or his/her designee. A pervious pavement design will require a maintenance plan if utilized as part of the stormwater management plan.

8C.10 Environmental Systems and Low Impact Devices

Bio-retention basins, wetlands, other environmental systems and devices incorporating low impact design (LID) principles are encouraged to be used and shall be designed and constructed in accordance with the latest BMP manual or MDCs.

8C.11 Cisterns

Cisterns may be used as part of a detailed stormwater quantity design provided that the cisterns are designed to meet the City of Asheville standards for stormwater quantity including draw down time.

8B.11a Annual Inspections. Annual inspections of the operation and maintenance of stormwater BMPs shall be performed as outlined in the City of Asheville Ordinance Sections pertaining to Operation and Maintenance.

8D Formal Plan Submittal Requirements

See "Appendix D: Requirements for Formal Grading, Erosion Control, and Stormwater Plans.

8E Final Project Closeout Submittals and As-built Record Drawing Documentation

8D.01a Closeout Documents. Closeout documents may include the following:

- All projects involving storm drainage or stormwater management devices.
- Design professional, contractor, and owner certificates of completions.
- Digital and hard copies of the as-built record drawings.
- Operation and maintenance agreements with accompanying exhibit representing the stormwater management facilities.
- Projects involving steep slopes:
  a. Slope stability certificate.
- Projects involving flood fringe and floodway:
  a. Elevation Certificate.
  b. Flood proofing certificate.
- Revised storm water design calculations that address field changes from the approved design.

8D.01b Final As-built Record Drawing Specifications. See "Appendix E: Storm Drainage and Stormwater As-built Specification".

SECTION 9 - APPENDICIES

9A Appendix A: Terminology, Words, and Abbreviations

ASSHTO	American Association of State Highway and Transportation Officials
ASTM	American Society of Testing and Materials
AWWA	American Water Works Association
BMP	Best Management Practices
CC	Asheville City Council
CBD	Central Business District
City Engineer	The City of Asheville's Engineer or his/her designee.
CEPTED	Crime Prevention Through Environmental Design
CMP	Corrugated Metal Pipe
FEMA	Federal Emergency Management Agency
FIRM	Flood Insurance Rate Map
ft.	foot
gpd	gallons per day
gpm	gallons per minute
HDPE	High Density Polyethylene Corrugated Pipe
ID	Internal Diameter
LID	Low Impact Design
MSD	Metropolitan Sewerage District
MUTCD	Manual on Uniform Traffic Control Devices
MDC	Minimum Design Criteria
NAD	North American Datum
NAVD	North American Vertical Datum
NCAC	North Carolina Administrative Code
NCDENR	North Carolina Department of Environmental and Natural Resources
NCDOT	North Carolina Department of Transportation
NFPA	National Fire Protection Association
NOAA	National Oceanic and Atmospheric Administration
NRCS	Natural Resource Conservation Service
OD	Outside Diameter
OSHA	Occupational Safety and Health Association
PAR	Pedestrian Access Route
P.C.	Point of Curvature
PE	Professional Engineer
plf	Pounds per linier foot
PLS	Professional Land Surveyor
ppm	parts per million
psi	pounds per square inch

P.T.	Point of Tangency
PVC	Polyvinyl Chloride
PZC	Planning and Zoning Commission
QPL	Qualified Products List
RCP	Reinforced Concrete Pipe
SCS	Soil Conservation Service
sf	square feet
SU	Single Unit Truck
Tc	Time of Concentration
TRC	Technical Review Committee
UDO	Unified Development Ordinance
UL	Underwriters' Laboratories, Inc.

9B Appendix B: Preferred Tree Species

9B.01 Small Deciduous Trees: 15' - 40'

Botanical Name	**Native**	**Mature**	**Mature**	**Light**	**Comments**
Acer buergeranum Trident Maple	**N**	25-35'	20-30'	sun	Good urban street tree, tolerant of drought, air pollution, and soil compaction, attractive with nice foliage, form, fall color, and exfoliating bark
Acer ginnala Amur Maple	***N***	15-20'	15-20'	sun or semi-shade	Adaptable to a wide range of soils, easy to transplant, tends toward multi-stem, not recommended for street tree, good for corners or blank walls of buildings
Aesculus ***x*** *carnea* Red Horsechestnut	**N**	30-40'	30-40'	sun or semi-shade	More resistant to blotch and mildew than *A. hippocastanum*, good for parks and other large use areas, good street tree, spectacular red flowers
Amelanchier arborea Serviceberry, Sarvis	**Y**	15-25'	10-15'	sun or semi-shade	Blooms in early spring before dogwoods with pink/ white flowers, recommended for planting under power lines, can be multi-trunked
Carpinus caroliniana American Hornbeam	**Y**	20-30'	20-30'	sun or shade	Good street tree, great for naturalizing along woodland edges, in buffer areas or along streams
Cercis canadensis Eastern Redbud	**Y**	20-30'	25-35'	sun or semi-shade	Beautiful magenta flowers in spring, best for use in woodland/naturalized settings, use in buffer areas as understory or street tree under power lines, difficult to transplant
Cotinus obovatus American Smoketree	**Y**	20-30'	20-30'	sun	Good small tree for street and urban plantings, tolerates dry soil conditions, magnificent fall foliage ranges from yellow/orange, to red/reddish purple, attractive bark in winter
Chionanthus virginicus White Fringetree	**Y**	15-20'	12-15'	sun or semi-shade	Beautiful white fragrant flowers in spring, dark blue fruit in fall, makes a great understory tree in buffer areas, or street tree under power lines
Cornus alternifolia Pagoda Dogwood	**Y**	15-25'	10-20'	sun or semi-shade	Fibrous spreading roots, best for naturalizing in buffer areas, spreading habit with horizontal branches creates a layered look
Cornus florida Flowering Dogwood	**Y**	20-30'	20-30'	sun or semi-shade	Good for naturalizing on edge of buffer areas, needs good air circulation, not pollution tolerant, not recommended for street tree planting
Cornus kousa *Kousa Dogwood*	**N**	20-30'	20-30'	sun or semi-shade	Creamy white flowers more prolific in sun, exfoliating bark, more disease resistant than *Cornus florida*, good for use near buildings, low branching
Crataegus phaenopurum *Washington Hawthorn*	**Y**	25-30'	20-25'	sun	Creamy white flowers in May, attractive in winter with persistent red fruit, good street tree
Hamamelis virginiana Witchhazel	**Y**	20-30'	20-25'	sun or shade	Great for naturalizing in buffer areas or as street tree under power lines

9B.01 Small Deciduous Trees: 15' - 40' (continued)

Botanical Name **Common Name**	**Native**	**Mature Height**	**Mature Spread**	**Light Requirements**	**Comments**
Koelreuteria paniculata *Goldenrain Tree*	**N**	30-40'	30-40'	sun	Withstands drought, heat, wind and pollution, good urban street tree, yellow summer flowers, reseeds easily
Magnolia soulangiana Saucer Magnolia	**N**	20-30'	20-30'	sun	Pinkish purple flowers in early spring susceptible to spring frost
Magnolia stellata Star Magnolia	**N**	15-20'	10-15'	sun	Tree-like shrub with fragrant white flowers in early spring, avoid planting in a southern exposure, best used as a specimen
Magnolia virginiana Sweetbay Magnolia	**Y**	15-20'	10-20'	sun or semi-shade	Tolerates wet, swampy conditions, handsome foliage with sweetly fragrant white flowers in spring and red fruit in fall
Malus *Flowering Crabapple*	**N**	15-25'	15-25'	sun	Beautiful spring flowering tree in many colors, new cultivars are more resistant to fire blight, recommended varieties include: 'Adams', 'Centurion', 'Prairie Fire', 'Harvest Gold', 'Autumn Glory', 'Red Snow', and 'Sugar Tyme'
Ostrya virginiana American Hophornbeam	**Y**	25-40'	20-40'	sun or part shade	Useful as an understory tree and also as a street tree
Oxydendrum arboreum Sourwood	**Y**	25-30'	15-20'	sun or part shade	White flowers in summer, excellent fall color, hard to transplant, drought tolerant
Parrotia persica Persian Parrotia	**N**	20-40'	15-30'	sun	Excellent small tree with exfoliating bark and crimson flowers in early spring, use as street tree under power lines or as an accent plant
Prunus sargentii *Sargent Cherry*	**N**	20-30'	20-30'	sun	Pink flowers in April/May, rich brown bark, good street tree under power lines
Prunus subhirtella Higan Cherry	**N**	20-40'	15-30'	sun	Long lived, cold heat and stress tolerant, 'Pendula' is a weeping variety
Pyrus calleryana *'Bradford'* Bradford Pear	**N**	35-40'	35-40'	sun	White flowers in spring, good fall color, good street tree, susceptible to breaking and cracking from ice and wind damage, short lived
Viburnam prunifolium Blackhaw Viburnum	**Y**	15-20'	8-12'	sun or shade	Adaptable to many soil types, does well in dry soils, white flowers in May, good fall color, fine specimen tree

9B.02 Large Deciduous Trees: > 40'

Botanical Name **Common Name**	**Native**	**Mature Height**	**Mature Spread**	**Light Requirements**	**Comments**
Acer rubrum *Red Maple*	**Y**	40-60'	varies	sun or shade	Fall leaf color varies, 'October Glory' and 'Red Sunset' cultivars are most popular for guaranteed bright orange/red fall color, very adaptable

9B.02 Large Deciduous Trees: > 40' (continued)

Botanical Name **Common Name**	**Native**	**Mature Height**	**Mature Spread**	**Light Requirements**	**Comments**
Acer saccharum Sugar Maple	**Y**	50-70'	30-40'	sun or semi-shade	Tolerant of poor soils, vigorous large root systems, not ideal for planting along sidewalks, exceptional yellow/orange fall color
Aesculus octandra Yellow Buckeye	**Y**	60-75'	30-50'	sun	Spectacular native trouble free tree
Betula nigra River Birch	**Y**	40-60'	16-20'	semi-shade	Good for areas that flood periodically, grows well on high or low ground
Carpinus betulus European Hornbeam	**N**	40-60'	30-50'	sun or semi-shade	Can prune as a hedge or screen, use in grouping around buildings or in planter boxes
Celtis occidentalis Common Hackberry	**Y**	40-60'	40-60'	sun	Nice native tree, withstands adverse city conditions, yellow green fall foliage, fall fruit is a favorite for birds
Cercidiphyllum japonicum Katsuratree	**N**	40-60'	40-60'	sun	Elegant tree, good street tree, needs ample moisture when young
Cladrastis lutea American Yellowwood	**Y**	30-50'	40-55'	sun	Spectacular cascading white flowers in spring, best as specimen or in groupings
Fagus grandifolia American Beech	**Y**	50-70'	50-60'	sun or shade	Beautiful native tree for large areas and natural settings, easy to establish, will not tolerate heavy pruning
Fagus sylvatica European Beech	**N**	50-60'	35-60'	sun or shade	Excellent specimen tree especially for public areas
Fraxinus americana White Ash	**Y**	50-80'	50-70'	sun	Good shade tree with fascinating fall color ranging from reddish purple to yellow
Fraxinus pennsylvanica Green Ash	**Y**	50-60'	varies	sun	Easy to grow, withstands city conditions, good shade tree for streets and parking lots, beautiful yellow fall color
Ginkgo biloba Ginkgo, Maidenhair	**N**	50-80'	varies	sun	Ancient tree with unique fan shaped leaf, beautiful shade tree, use male trees only as female fruit produces offensive odor, good urban tree, prune to single trunk
Gleditsia triacanthos var. inermis Thornless Honeylocust	**Y**	30-70'	30-70'	sun	Very adaptable, good salt tolerance, select fruitless variety *rotua* for landscape use
Larix decidua European Larch	**N**	70-75'	25-30'	sun	Deciduous conifer with elegant spring growth, tolerant of moist and dry soils and windswept locations
Liquidambar styraciflua Sweetgum	**Y**	60-75'	40-50'	sun or semi-shade	Excellent fall color, good for planting in moist areas along streams, plant only *rotundilob*', a fruitless variety, for streets and parking lots

9B.02 Large Deciduous Trees: > 40' (continued)

Botanical Name **Common Name**	**Native**	**Mature Height**	**Mature Spread**	**Light Requirements**	**Comments**
Liriodendron tuliperfera Tulip Poplar, Yellow Poplar	**Y**	70-90'	35-50'	sun	Large, stately tree, susceptible to drought, best known for flowers in spring and beautiful yellow fall color, good for street trees next to sidewalks
Metasequoia glyptostroboides Dawn Redwood	**N**	70-100'	25-30'	sun	Deciduous conifer, distinctive pyramidal habit, easy to transplant, lovely ornamental for screening, streets, also excellent for groves along lakes and streams
Nyssa sylvatica *Black Tupelo*	**Y**	30-50'	20-30'	sun or semi-shade	Fluorescent yellow, orange and scarlet fall color, good street tree in residential areas
Platanus acerifolia London Planetree	**N**	70-100'	65-80'	sun or semi-shade	Withstands severe city conditions, good for use as street tree, easily transplanted, mottled bark
Platanus occidentalis American Sycamore	**Y**	75-100'	75-100'	sun or semi-shade	Use for naturalized settings along streams, very large tree, needs lots of space, good downtown street tree
Prunus yedoensis Yoshino Cherry	**N**	40-50'	40-50'	sun	Soft pinkish white flowers in early spring make spectacular display, fast growing,
Quercus alba White Oak	**Y**	50-80'	50-80'	sun or semi-shade	Majestic large shade tree, slow growing but long lived, difficult to transplant, sensitive to root disturbance when grading
Quercus bicolor Swamp White Oak	**Y**	50-60'	50-60'	sun	Good for planting in low lying areas, easier to transplant than white oak
Quercus coccinea Scarlet Oak	**Y**	70-75'	40-50'	sun	Long lasting bright red and scarlet leaves in fall, good for street plantings
Quercus palustris Pin Oak	**Y**	60-70'	25-40'	sun or semi-shade	One of the easiest oaks to grow and transplant, good for street plantings if lower limbs are removed
Quercus phellos Willow Oak	**Y**	40-60'	30-40'	sun	Extremely tolerant of heat and stress, excellent street tree, easily transplanted
Quercus rubru Red Oak	**Y**	60-75'	60-75'	sun or semi-shade	Excellent shade tree and effective as a street tree, easy to transplant, rapid grower
Salix alba *White Willow*	**N**	50-75'	50-75'	sun or semi-shade	Low branching tree with flexible stems, weeping varieties available, naturalized in the US, best for use in moist areas near water
Sophora japonica Japanese Pagoda Tree	**N**	50-70'	50-70'	sun	Good tree for city conditions, creamy flower panicles in summer, very showy but can be messy
Taxodium distichum Baldcypress	**Y**	50-70'	20-30'	sun	Deciduous conifer with tall airy, columnar habit, can withstand swampy conditions, but tolerant of upland drier sites, good street tree

9B.02 Large Deciduous Trees: > 40' (continued)

Botanical Name **Common Name**	**Native**	**Mature Height**	**Mature Spread**	**Light Requirements**	**Comments**
Tilia americana Basswood, American Linden	**Y**	60-80'	20-40'	sun	Fragrant yellow flowers in June, good for naturalizing in buffers
Tilia cordata Littleleaf Linden	**N**	60-70'	30-45'	sun	This is one of the best city street or parking lot trees, yellowish fragrant flowers appear in June
Tilia tomentosa Silver Linden	**N**	50-70'	25-45'	sun	Tolerant of heat and drought, good street tree for residential areas, yellowish white fragrant flowers, in summer but later than other lindens
Ulmus americana American Elm	**N**	50-80'	30-50'	sun or semi-shade	Tough and durable, good for streets and parking lots, new varieties resistant to Dutch elm disease include 'Valley Forge', 'Princeton' and 'New Harmony'
Zelkova serrata Japanese Zelkova	**N**	50-80'	50-80'	sun or semi-shade	Good shade tree for streets and parking lots, heat and drought tolerant, exfoliating bark

9B.03 Evergreen Trees: >15'

Botanical Name **Common Name**	**Native**	**Mature Height**	**Mature Spread**	**Light Requirements**	**Comments**
Abies concolor White Fir	**N**	30-50'	15-20'	sun	Withstands heat, drought and cold, well adapted for general landscape use
Cedrus atlantica Atlas Cedar	**N**	40-60'	30-40'	sun	Magnificent evergreen, frosty blue needles, drought tolerant, use as specimen tree
Cedrus deodara Deodar Cedar	**N**	40-70'	30-50'	sun	Fluffy dense habit, silvery foliage, adaptable to dry conditions, fast grower
Cedrus libani Cedar of Lebanon	**N**	40-60'	40-60'	sun	Stately tree with thick massive trunk, dark green foliage, use as a specimen
Chamaecyparis pisifera Falsecypress	**N**	10-40'	10-20'	sun	Species is large tree but most cultivars are smaller, use as accent plant
Cryptomeria japonica Japanese Cryptomeria	**N**	50-60'	20-30'	sun or semi-shade	Graceful and stately, useful alternative to leyland cypress for hedges and screening, protect from harsh winds
x*Cupressocyparis leylandii* Leyland Cypress	**N**	60-70'	10-15'	sun	Forms excellent upright hedge or windscreen, fast growing, best if left unpruned and used in a mixed border
Ilex opaca American Holly	**Y**	40-50'	20-40'	sun or semi-shade	Slow growing, plant male and female for berries, protect from winter sun and desiccating winds
Abies concolor White Fir	**N**	30-50'	15-20'	sun	Withstands heat, drought and cold, well adapted for general landscape use
Cedrus atlantica Atlas Cedar	**N**	40-60'	30-40'	sun	Magnificent evergreen, frosty blue needles, drought tolerant, use as specimen tree

9B.03 Evergreen Trees: >15' (continued)

Botanical Name **Common Name**	**Native**	**Mature Height**	**Mature Spread**	**Light Requirements**	**Comments**
Juniperus scopulorum Rocky Mountain Juniper	**N**	30-40'	3-15'	sun	Valued for screens and hedges, blue cast to the foliage, 'Skyrocket' is very narrow cultivar
Juniperus virginiana *Eastern Redcedar*	**Y**	40-50'	10-20'	sun	Useful for windbreaks and shelter belts, sage green foliage becomes bronze in winter
Osmanthus americanus Devilwood	**Y**	15-20'	10-15'	sun or semi-shade	Glossy green foliage, low maintenance shrub for urban areas, useful as hedge or screen, dark purple fruit in fall, fragrant spring flowers
Picea abies Norway Spruce	**N**	40-60'	25-30'	sun or semi-shade	Rapid growth when young, use for screening
Picea orientalis Oriental Spruce	**N**	50-60'	10-15'	sun or semi-shade	Dense compact narrow habit, tolerant of infertile soils, makes a great specimen conifer
Picea pungens Colorado Blue Spruce	**N**	30-60'	10-20'	sun	Best as specimen, blue foliage, tolerant of dry conditions
Pinus bungeana Lacebark Pine	**N**	30-50'	20-35'	sun	Rich green foliage, exfoliating bark, slow grower, often multi-stemmed
Pinus densiflora Japanese Red Pine	**N**	40-60'	40-60'	sun	Picturesque interesting form, use as specimen, decorative orange exfoliating bark
Pinus strobus White Pine	**Y**	50-80'	20-40'	sun	Good temporary screen when young then lower branches fall, better for background use in mixed borders
Taxus baccata English Yew	**N**	30-60'	15-25'	sun or shade	Cultivated in England for centuries, with many cultivars available smaller than species, adapts well to varied conditions, easily pruned
Thuja occidentalis American Arborvitae	**Y**	40-60'	10-15'	sun	Best for use as screens or hedges, stiff pyramidal habit, durable
Thuja orientalis Oriental Arborvitae	**N**	15-25'	10-15'	sun	Good for a wide range of landscape needs, very tolerant of heat, cold and poor soils
Tsuga canadensis Canadian Hemlock	**Y**	40-70'	25-35'	sun or shade	Protect from desiccating winds, not very tolerant of urban conditions, best used for screening and buffers
Tsuga caroliniana Carolina Hemlock	**Y**	45-60'	20-25'	sun or shade	More tolerant of urban conditions than *Tsuga canadensis*, not tolerant of drought, protect from winds

9B.04 Small Deciduous Shrubs: 2' - 4'

Botanical Name **Common Name**	**Native**	**Mature Height**	**Mature Spread**	**Light Requirements**	**Comments**
Callicarpa dichotema *Purple Beautyberry*	**N**	3-4'	4-5'	sun	Graceful and refined, purple fruit September through November, best used in mass
Caryopteris ***x*** *cladonensis* Blue-Mist Shrub	**N**	2-3'	2-3'	sun	Perennial shrub that should be cut back to ground each year, soft blue flowers in late summer
Deutzia gracilis Slender Deutzia	**N**	2-4'	3-4'	sun	Low, graceful shrub with pure white flowers in May, use in borders and for mass plantings
Fothergilla gardenii Dwarf Fothergilla	**Y**	2-3'	2-3'	sun or semi-shade	Fragrant white, bottlebrush like flowers appear in mid spring, beautiful fluorescent yellow, orange and red fall foliage
Jasminum nudiflorum Winter Jasmine	**N**	2-4'	3-5'	sun or shade	Low spreading plant with yellow flower in late winter, good for covering banks
Spiraea ***x*** *bumalda* *Bumald Spirea*	**N**	3-4'	5-6'	sun	'Goldflame' & 'Anthony Waterer' are popular cultivars, pink flowers, bronze red fall color

9B.05 Groundcovers

Botanical Name **Common Name**	**Native**	**Mature Height**	**Mature Spread**	**Light Requirements**	**Comments**
Ajuga reptans Bugleflower	**N**	<1'	no limit	semi-shade	Excellent ground cover for moist locations, good for rock gardens, blue spiked flowers in mid spring
Euonymus fortunei Wintercreeper	**N**	1-4'	3-4'	sun or shade	Many cultivars available, good for ground cover or low hedge, best used in mass or groups
Hedera helix English Ivy	**N**	<1	varies	shade	Adaptable groundcover can also be used as a vine to cover structures, will not engulf foliage like kudzu
Juniperus conferta *Shore Juniper*	**N**	1-2'	6-9'	sun	Low groundcover with bluish green foliage, tolerant of poor dry soils, popular cultivars include 'Blue Pacific', 'Emerald Sea' and 'Silver Mist'
Juniperus horizontalis *Creeping Juniper*	**N**	1-4'	varies	sun	Lacy foliage, makes good groundcover for hot, dry sites, good for foundation plantings on slopes and in containers, cultivars include 'Wiltonii' ('Blue Rug'), and 'Plumosa'
Juniperus procumbens Japanese Garden Juniper	**N**	1-2'	10-12'	sun	One of the best ground cover junipers for terraces and hillsides, cultivars include 'Nana', and 'Green Mound'
Liriope muscarii Creeping Liliturf	**N**	1-2'	1-2'	sun or shade	Effective in mass as ground cover under trees, lavender flowers in fall followed by black fruit

9B.05 Groundcovers (continued)

Botanical Name **Common Name**	**Native**	**Mature Height**	**Mature Spread**	**Light Requirements**	**Comments**
Pachysandra procumbens Pachysandra	**Y**	1'	varies	shade	Low growing native ground cover with mottled foliage, leaves larger than *Pachysandra terminalis*
Pachysandra terminalis Pachysandra	**N**	1'	varies	shade	Great low growing groundcover of uniform height for shady areas where grass does not grow

9B.06 Small Evergreen Shrubs: 2' - 4'

Botanical Name **Common Name**	**Native**	**Mature Height**	**Mature Spread**	**Light Requirements**	**Comments**
Berberis thunbergii Japanese Barberry '	**N**	2-4'	2-3'	sun	Great for hedges and barriers, withstands dry conditions, yellow flowers and red berries, many cultivars available
Buxus microphylla Little Leaf Boxwood	**N**	3-4'	3-4'	sun	Compact rounded shrub, good for hedges, foundation plantings or edging
Cotoneaster apiculatus Cranberry Cotoneaster	**N**	2-3'	3-6'	sun or semi-shade	Good for use on steep hillsides and banks or near walls where branches can hang over, bronze fall foliage with cranberry fruit in late summer into fall
Cotoneaster salicifolius 'Scarlet Leader' Willowleaf Cotoneaster	**N**	2-3'	6-8'	sun	Low growing cultivar with glossy green foliage and red berries, purplish-red winter leaf color, good for steep banks
Hypericum patulum St. John's Wort	**N**	3-4'	3-4'	sun	Evergreen in warmer areas, golden yellow flower in summer, good for foundation plantings or low hedges
Leucothoe fontanesiana Drooping Leucothoe, Doghobble	**Y**	3-4'	3-5'	shade	Great for naturalizing in shady locations, on banks, good companion with rhododendrons, white flowers in spring
Prunus laurocerasus, 'Otto Luyken' Otto Luyken Laurel	**N**	3-4'	5-7'	sun or shade	Popular plant for parking lots in the south, large lustrous dark green foliage
Pinus mugo 'Compacta' Mugo Pine	**N**	3-4'	2-4	sun	Good as specimen or container plant
Rhododendron obtusum Kurume Azalea	**N**	2-4'	2-4'	semi-shade	Hybrid group of evergreen azaleas, all colors available, good for foundation plantings and small scale settings

9C Appendix C: Ground Cover

9C.01 Temporary Ground Cover

Temporary ground cover* consist of vegetation, seeding with straw, mulches**, stone rocking or rip-rap, and erosion control nettings and matting (highly recommended for slopes 2:1 and greater)

9C.02 Permanent Ground Cover

Permanent ground cover* consist of vegetation (Must Cover 80% of disturbed area with no contiguous bare areas greater than 1 sq. yd), Trees, shrubs and vines (allowed in landscape areas or wooded settings), mulches or rocking (allowed only in permanent landscape areas).

* *Please note that ground cover, especially temporary ground cover, requires maintenance. If ground cover is not properly maintained, your site will be in violation of the City of Asheville Erosion Control Ordinance.*

** *Mulch is a temporary ground cover intended to provide temporary erosion prevention and promote growth of vegetation. Mulch may only be used as a permanent ground cover in the beds of installed landscaping with an accompanying landscaping plan and for land disturbance activities that are exempt from provisions of the erosion prevention and sediment control regulations as specified in the Unified Development Ordinance.*

9C.03 Ground Cover in Stream Buffers

All areas disturbed within the vegetated buffer of intermittent and perineal streams shall receive permanent ground cover as specified herein.

9C.04 Soil Stabilization

Soil stabilization shall be achieved on any area of a site where land-disturbing activities have temporarily or permanently ceased according to the following schedule:

- All perimeter dikes, swales, ditches, perimeter slopes and all slopes steeper than 3:1 shall be provided temporary or permanent stabilization with ground cover as soon as practicable but in any event within 7 calendar days from the last land-disturbing activity.
- All other disturbed areas shall be provided temporary or permanent stabilization with ground cover as soon as practicable but in any event within 14 calendar days from the last land-disturbing activity.

9C.05 Conditions

In meeting the stabilization requirements above, the following conditions or exemptions shall apply:

- Extensions of time may be approved by the permitting authority based on weather or other site-specific conditions that make compliance impracticable.
- All slopes 50’ in length or greater shall apply the ground cover within 7 days except when the slope is flatter than 4:1.
- Slopes less than 50’ shall apply ground cover within 14 days except when slopes are steeper than 3:1, the 7 day requirement applies.
- Any sloped area flatter than 4:1 shall be exempt from the 7 day ground cover requirement.
- Although stabilization is usually specified as ground cover, other methods, such as chemical stabilization, may be allowed on a case by case basis.
- For portions of projects within the Sediment Control Commission-defined “High Quality Water Zone” (15A

NCAC 04A. 0105), stabilization with ground cover shall be achieved as soon as practicable but in any event on all areas of the site within 7 calendar days from the last land-disturbing act.

- Portions of a site that are lower in elevation than adjacent discharge locations are not expected to discharge during construction may be exempt from the temporary ground cover requirements if identified on the approved Erosion & Sediment Control Plan or added by the permitting authority.

9D Appendix D: Requirements for Formal Grading, Erosion Control, and Stormwater Plans

Formal site plans as required the Unified Development Ordinance, shall be submitted for review and approval on 24" X 36" sheets and use an engineering scale between 1"=10' to 1"=50'. All plans must be based on the NAD 83 and NAVD 88 datum and shall include:

If project disturbs more than 1 acre or results in impervious area greater than 50% of the entire site acreage, and the project results in an increase in impervious area of 5,000 square feet or greater, the project shall meet the requirements of subsection 7-12-2(f) of the City of Asheville UDO. All erosion and sediment control shall be based upon the latest revision of the "Erosion and Sediment Control Planning and Design Manual" by NCDENR.

All Grading, Erosion Control, and Stormwater Plans Shall Include a "Development Data Block" the Following Information:

Requirement
Name of property owner(s).
Name, address, and phone number of contact person.
PIN number(s) of property being developed.
Size of property in acres.
Amount of disturbed area in acres.
A table indicating the amounts of pre- and post-development pervious/impervious areas in acres, and the percentage of total parcel for pre- and post-development impervious areas.
Cut and fill volumes and indicate if waste or borrow areas are proposed.
Soil types.
Zoning district.
Approval block (3" x 5" white space) near the lower right corner of the front sheet.

All Grading / Erosion Control and Stormwater Plans Shall Include the Following:

Requirement
North arrow.
A 4"x 4" vicinity map at a maximum scale of 1"=1000'.
A graphic scale for the plan (engineering scale not greater than 50-scale).
Show all existing property boundaries with dimensions.
PIN number(s) of adjacent properties.
Show existing and proposed topographical contours (2 ft. increments or less).
Elevation labels shall be provided for contours at 20 ft intervals.
(Contour information shall be developed from actual field topographic survey, and must be tied to N.C. Grid and NAVD 1988. A copy of the sealed topographic survey will be required).
Show and label all existing and proposed retaining walls with top/bottom of wall elevations and reference appropriate detail(s).
Show and label all water courses and water bodies within aquatic buffers, along with their associated buffers.
If existing trees are to be removed from aquatic buffers, show and label location.
Show and label all existing and proposed structures and improved areas.
Show finished floor elevations for all buildings.

All Grading / Erosion Control and Stormwater Plans Shall Include the Following:(continued):

Requirement
Show and label all flood fringe and floodway zones per 2010 FIRM panels.
Provide FEMA Elevation Certificates for any proposed structures, or any structures that have been substantially damaged or will be substantially improved, that are within the 100-year floodplain.
Show and label all existing and proposed utilities.
Show, label and dimension existing and proposed easements .
Show and label name and width of all adjacent streets.
Show and dimension all rights-of-way

All Grading and Erosion Control Plans Shall Include the Following:

Requirement
Show and label all proposed silt fence(s) and reference appropriate detail(s).
Show and label proposed temporary diversion ditches: • All ditch sections shall be labeled with a ditch ID. • Indicate the % slope of all ditch sections. • Provide ditch cross-sections, indicating ditch depth, top and bottom widths and side slopes. • Indicate type and installation requirements for in ditch erosion protection, such as riprap, geo-blankets, etc.
Show and label proposed temporary sediment basins. • Dimension basins. • Indicate basin volume. • Depict grading for basin by showing basin contours. • Reference appropriate standard detail. • Provide a maintenance schedule on the plans.
Show all inlet protection measures and reference appropriate detail(s).
Show, label and dimension all proposed construction entrances and reference appropriate detail(s).
Show any other sediment control devices not listed above and reference appropriate detail(s).
For all slopes 4:1 or greater, show the method of stabilization, such as hydro-seeding, geo-blankets, etc.
Provide a construction sequence for the erosion control measures.
Provide all pertinent grading and erosion control notes and details.
If sediment basins are proposed: volume, area, inflow and out flow calculations shall be submitted. *Calcultions shall bear design professional seal and signature.*
Show and label all existing and proposed storm drainage structures: • The type of structure shall be indicated. • All structures shall be labeled with a structure ID. • Invert elevations shall be indicated for all pipes in the structure. • The elevation of the top of the structure shall be indicated. • The appropriate standard detail shall be referenced.
Show and label all existing and proposed storm drainage pipes: • The material type of pipe shall be indicated. • All pipes shall be labeled with a pipe ID. • The length, size and slope of all pipes shall be indicated. • The appropriate standard installation detail shall be referenced.

All Grading and Erosion Control Plans Shall Include the Following (continued):

Requirement
Show and label all existing and proposed permanent storm conveyance ditches: • All ditch sections shall be labeled with a ditch ID. • Indicate the % slope of all ditch sections. • Provide ditch cross-sections, indicating ditch depth, top and bottom widths and side slopes. • Indicate type and installation requirements for in ditch erosion protection, such as riprap, geo-blankets, etc.
Provide profiles for storm drainage system which shall include the following: • Storm drainage structures and pipes with all information as indicated above. • All crossings with other existing and proposed underground utilities with separation distances indicated. • Existing and proposed grades.
Show and label all storm drainage dispersion devices.
Provide headwalls or end sections at all pipe outlets and reference appropriate detail(s).
Provide all referenced details on the plans.

Additional items required for Grading / Erosion Control plan submittals:

Requirement
The Financially Responsible Person section of the grading application shall be completed and signed before the application will be accepted and processed.
For all projects that disturb over 5 acres, a security for re-vegetation in the amount of $3,500.00 per disturbed acre or part thereof is required prior to approval of the grading permit.
For projects with twenty-five thousand square feet of disturbance or greater, a contract is required between the financially responsible person and a licensed professional for erosion and sediment control compliance inspections. The executed and notarized Certificate of Inspection Agreement shall be submitted prior to approval of the grading permit.
For pipes and ditches: provide capacity and velocity calculations. *Calculations shall bear design professional seal and signature.*
For outlets: provide calculations for dispersion devices and reference the appropriate detail(s). *Calculations shall bear design professional seal and signature.*
For inlets on public streets: provide stormwater spread calculations. *Calculations shall bear design professional seal and signature.*
Copy of the property deed(s).
If the property owner resides outside the state of North Carolina, an in state agent must sign the application and provide a notarized letter of authorization from the owner.

All Stormwater plans shall include the following:

Requirement
Show and label all existing and proposed detention/retention basins, underground storage systems and all other BMPs. • All basins shall be labeled with a basin ID. • Dimension basins. • Indicate basin volume. • For above ground basins, show grading for basin by showing basin contours. • Provide specific basin cross-sections and information, which indicates all pertinent design information.
Show and label all existing and proposed stormwater control structures: • All structures shall be labeled with a structure ID. • Provide a specific control structure detail with dimensions, which indicates all pertinent design information. • Provide a 6-foot chain link fence and access gate for all above ground basins that do not meet safety requirements. • Provide all pertinent stormwater notes and details.

Additional items required for Stormwater plan submittals:

Requirement
Stormwater quantity control systems shall limit the 2-year and 10-year developed peak discharge rates to pre-developed peak discharge rates using the 24-hour SCS Type II design storm and pass the 50-year, 24-hr event storm.
Stormwater quality control systems shall control and treat the runoff leaving the site from the first inch of rain (determined using Simple Method). The volume of runoff from retention and detention systems shall be detained between 48 and 120 hours. The volume of runoff from bio-retention basins shall drain into the soil and result in no water ponding within 24 hours. All structural stormwater treatment systems shall be designed to have a minimum of 85% average annual removal for Total Suspended Solids.
For basins and control structures: pre and post development runoff, storage volume, inflow and out flow calculations shall be submitted. Also, provide a maintenance schedule with the calculations. *Calculations shall bare design professional seal and signature.*
Development or redevelopment required to comply with the provisions for post-construction stormwater control, a contract is required between the person financially responsible and a licensed professional for post construction stormwater control compliance checks.
Note: A pre-construction meeting will be required for all projects with storm drainage systems or stormwater management systems. Cut sheets for all structures must be submitted prior to the pre-construction meeting.

9E Appendix E: Storm Drainage and Stormwater As-built Record Drawing Specification

Per the final release requirements outlined in the Code of Ordinances; All stormwater management BMPs, facilities and related improvements, and all storm drainage structures and conveyances shall be field surveyed and represented on an as-built record drawing per the following specifications;

- 1 copy of a digital electronic file of the as-built record drawing shall be delivered on CD-ROM in
- AutoCAD .dwg format (Version 14 or newer).
- 2 hardcopies of each as-built record drawing sheet are required upon delivery.
- All digital as-built record drawing entities shall be referenced using the North Carolina State Plane Coordinate System, U.S. Survey Feet as Units of Measure (grid coordinates, carried to two or more decimal places), NAVD 88' Vertical Datum, NAD 83' Horizontal Datum (epoch specified). This spatial reference shall be clearly noted on the drawing. All drawing entities shall be referenced to a monument grid tie associated with at least one storm drainage structure located on the subject property. The relative horizontal and vertical accuracy of field surveyed data should be equal to or less than 0.10 feet.
- The as-built record drawing shall include a North arrow indicating Grid North.
- The as-built record drawing shall include the City of Asheville issued permit number related to the storm drainage and/or stormwater project.
- The as-built record drawing shall include a vicinity map depicting the general location of the site.
- The general feature type, northing, easting, and top elevation of all storm drainage structures, stormwater BMPs, facilities, and related improvements shall be clearly labeled on the drawing, adjacent to the feature to which they correspond OR the labels may be configured using a cross-referenced table system that utilizes unique identifiers.
- All pipes and like conveyances shall be represented on the drawing and associated with text or labels indicating slope, distance, diameter (or dimensions), material type, inverts (in & out), and dissipation pad sizes. Text and labels should be clearly legible and placed next to the features to which they correspond OR they may be configured using a cross-referenced labeling and table system that utilizes unique identifiers.
- All above-ground detention or retention facilities, BMPs, or similar facilities shall be represented on the drawing using 1' contours enclosed by outer breakline(s). Labels or text indicating the maximum storage volume (for a 50-year storm event) and associated elevation should be placed inside the feature or adjacent to the feature with which it corresponds. Perimeter fencing associated with storage facilities must be represented on the drawing per as-built conditions. A field surveyed as-built detail of any outlet control structures or associated features must be included.
- All accessible structures and conveyances associated with underground storage systems shall be represented within the drawing. Labels or text indicating the maximum storage volume (for a 50-year storm event) and associated elevation should be placed inside the feature or adjacent to the feature with which it corresponds. A field surveyed as-built detail of any outlet control structures or associated features must be included.
- The outline of the 100-Year (1% annual chance) floodplain boundary and any associated floodway or non-encroachment areas shall be represented on the drawing per the approved site plans.

- The as-built record drawing shall include the boundary of the subject property by courses and distances with references.
- Storm drainage structures and conveyances, and stormwater BMPs, facilities, and related features shall be included in one or more separate CAD drawing layers, where the keyword "Stormwater" shall be included in the title or name for all such layers.
- Impervious features and facilities, including but not limited to; driveways, parking areas, walkways, building footprints & utility pads shall be represented on the drawing per the approved site plans. These features shall be included in one or more separate CAD drawing layers, where the keyword "Impervious" shall be included in the title or name for all such layers.
- The as-built record drawing shall be certified, signed, dated, and sealed by a registered design professional certified to sign and seal such documents. The text "As-Built Record Drawing" shall be clearly marked on each page.

SECTION 10 - STANDARD DETAILS

10A List of Standard Details

10A.01 Section 3 - Transportation Design Standards

Standard Street Sections (Suburban Collector, Urban Collector & Local) **3.01**
Standard Street Sections (Alternate Access & Alley) **3.02**
Roadway Widening **3.03**
Interlocked Concrete Paver Street Section **3.04**
Standard Section Without Curb & Gutter **3.05**
Standard Section Without Sidewalk **3.06**
Standard Street Cross Section Sowing Utility Locations **3.07**
Cul-de-Sac Dimensions **3.08**
End Islands for Parking Lots **3.09**
A.B.C. Under 2'-6" Curb & Gutter **3.10**
Valley Curb Detail **3.10A**
Standard Concrete Curb & Gutter **3.11**
Standard Stand-up, Mountable & Median Curb **3.11A**
Median Island w/Standard Mountable Curb **3.11B**
Median Island w/Standard Stand-up Curb **3.11C**
Granite Curb Installation **3.11D**
Standard Method of Removing Existing Curb for a Driveway Apron Installation **3.12**
Standard Method of Ending Curb and Gutter **3.13**
Pop-up Drainage Emitter **3.14**
Standard Driveway Access Apron With Sidewalk & Utility Strip **3.15**
Standard Driveway Access Apron With Sidewalk Adjacent to Curb **3.15A**
Standard Driveway Access Apron With Curb and Gutter & Without Sidewalk **3.15B**
Standard Driveway Access Apron Without Curb & Without Sidewalk **3.15C**
Standard Driveway Access Apron With Stand-up Curb & Without Sidewalk **3.15D**
Standard Concrete Sidewalk **3.16**
Monolithic Curb & Sidewalk **3.16A**
Standard Concrete Sidewalk With Bond Pattern **3.16B**
Standard Wheel Chair Ramp **3.17**
Standard Wheel Chair Ramp **3.17A**
Standard Wheel Chair Ramp **3.17B**
Standard Wheel Chair Ramp **3.17C**
Standard Pavement Widening and Taper Markings **3.18**
Temporary Barricade for Dead End Roads **3.19**
Brick Sidewalks at Driveway Entrances **3.20**
New Brick Sidewalk **3.21**
Sidewalk Tree Pit, Reinforced Concrete Sidewalk **3.22**
Sidewalk Tree Pit, Structural Soil **3.22A**
Sidewalk Tree Pit, Silva Cell **3.22B**
Sidewalk Tree Pit, Large Tree Grate with Washed Stone Border **3.22C**
Sidewalk Tree Pit, Standard Tree Grate with Washed Stone Border **3.22D**
Sidewalk Tree Grate & Frame **3.22E**
Tree & Shrub Planting **3.22F**
Radius Concrete Keystone **3.23**

Lamp Post Base **3.24**
Concrete Circle **3.25**
Mountable Concrete Island **3.26**
Mountable Concrete Traffic Separator Island **3.27**
22' Collector Street Speed Table **3.28**
14' Collector Street Speed Hump **3.29**
High Visibility Cross Walk **3.30**
Collector Street Speed Table and Hump Markings **3.31**
Lateral Shift Island w/Standard Mountable Curb **3.32**
Lateral Shift Island w/Standard Stand-up Curb **3.33**
Traffic Island w/Standard Mountable Curb **3.34**
Pedestrian Safety Railing **3.35**

10A.02 Section 5 - Utilities

Pavement Removal and Replacement **5.01**
Rigid Pavement Repair **5.02**
Gravel Surface Repair and Bedding **5.03**
Pavement Removal & Replacement for Perpendicular Cuts **5.04**
Asphalt Driveway Replacement **5.05**
Carrier Pipe in Steel Encasement **5.06**
Shoulder Repair **5.07**
Typical Steel Encasement and Carrier Pipe Installation Under Rail Road **5.08**
Road Pavement Repair Utility Trench Width Only **5.09**
Road Pavement Repair **5.10**

10A.03 Section 7 - Soil Erosion and Sedimentation Control

Standard Temporary Silt Fence **7.01**
Standard Temporary Silt Fence With Reinforced Stabilized Outlet **7.01A**
Residential Construction Entrance **7.02**
Commercial Construction Entrance **7.03**
Diversion Ditch **7.04**
Wattle Detail **7.05**
Rip Rap Lined Channels **7.06**
Check Dam **7.07**
Temporary Sediment Trap **7.08**
Skimmer Sediment Basin **7.09**
Skimmer detail **7.09A**
Gravel & Rip Rap Pipe Inlet Protection **7.10**
Standard Catch Basin Inlet Protection **7.11**
Block & Gravel Inlet Protection **7.11A**

10A.04 Section 8 - Stormwater

Standard Yard Inlet with Concrete Slab **8.01**
Standard Yard Inlet with Grate and Frame **8.02**
Precast Concrete Catch Basin **8.03**
Precast Concrete Catch Basin **8.03A**
Precast Concrete Manhole Junction Box **8.04**
Precast Concrete Manhole Junction Box **8.04A**
Curb Inlet for 18" & 24" Curb & Gutter **8.05**
Storm Drain Pipe Location Methods **8.06**

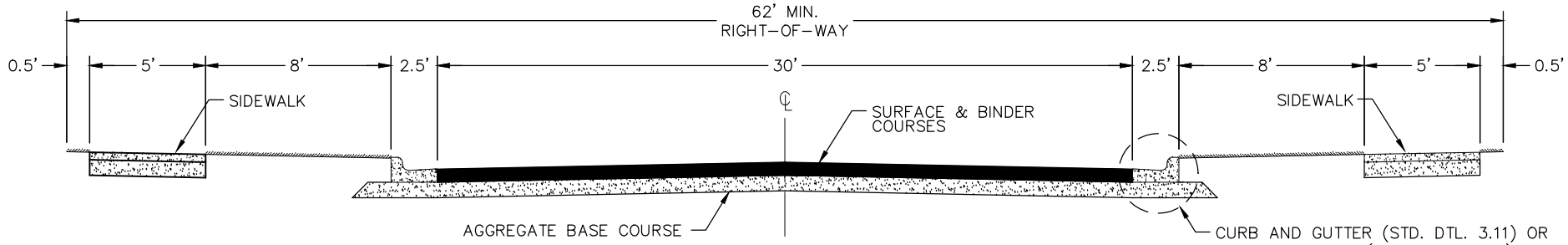

SUBURBAN COLLECTOR STREET SECTION

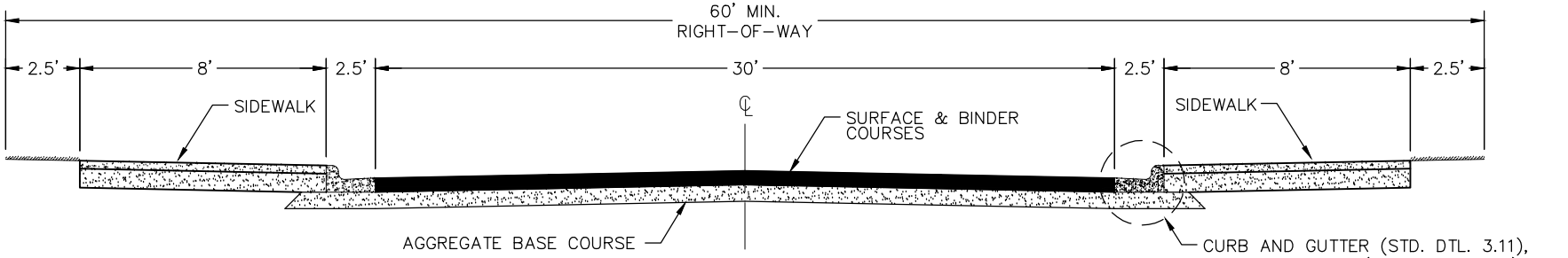

URBAN COLLECTOR STREET SECTION

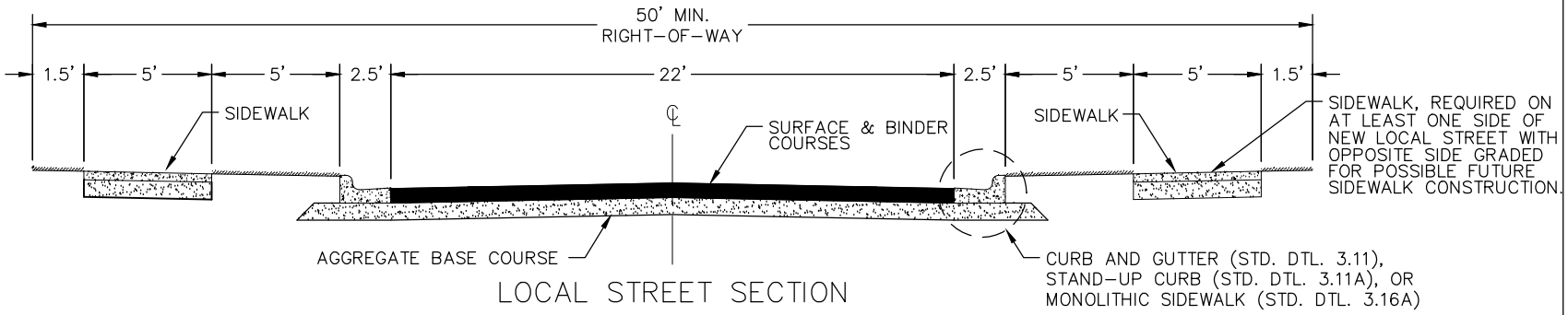

LOCAL STREET SECTION

PAVEMENT DESIGN

SURFACE COURSE = 2" OF SF 9.5A, S 9.5B, OR S 9.5C

BINDER COURSE = 5" OF I 19.0B OR B 25.0B OR THE APPLICATION OF BOTH BINDERS COURSES (I 19.0B ON TOP OF B 25.0B) ONLY 4" OF BINDER COURSE WHEN STAND-UP CURB IS INSTALLED.

AGGREGATE BASE COUSE = 8" OF A.B.C.

City of Asheville, NC Standard Specifications and Details Manual	STANDARD STREET SECTIONS (SUBURBAN COLLECTOR, URBAN COLLECTOR & LOCAL)	REVISIONS DATE / DESCRIPTION	STD. NO. 3.01

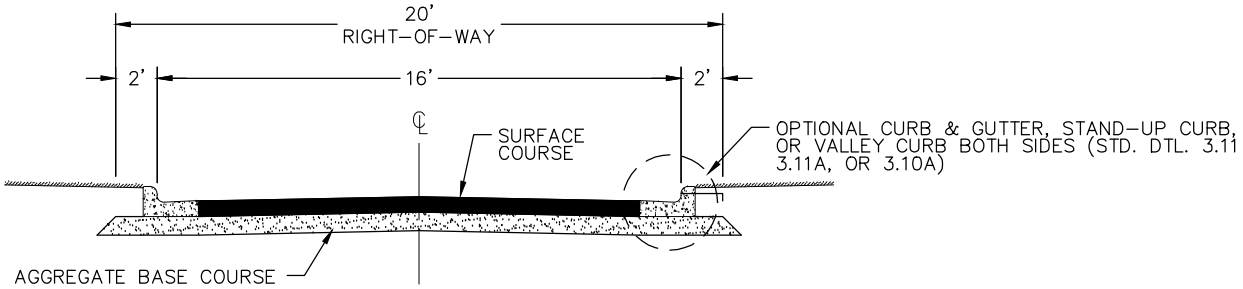

ALTERNATE ACCESS STREET SECTION

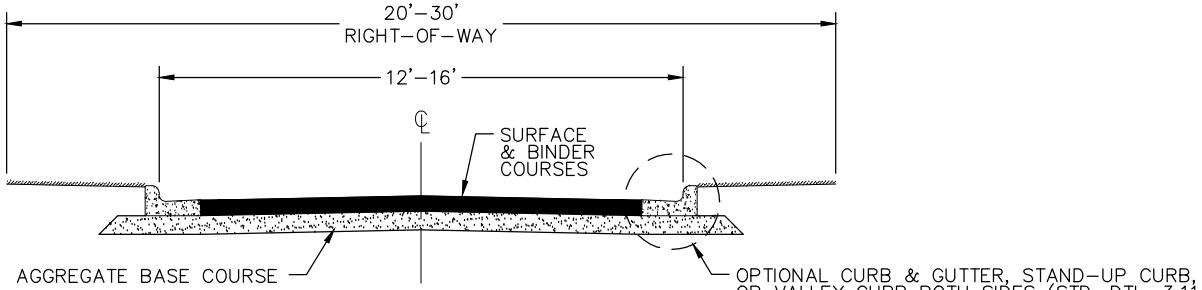

ALLEY STREET SECTION

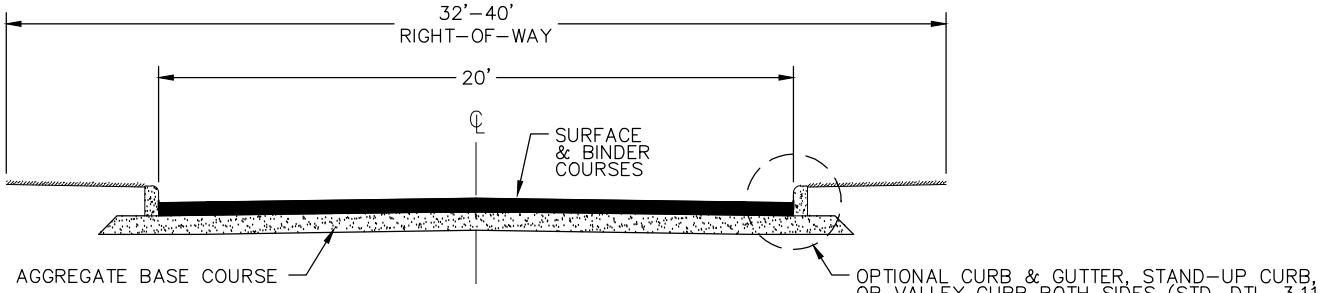

LOW IMPACT STREET SECTION

PAVEMENT DESIGN

SURFACE COURSE = 2" OF SF 9.5A, S 9.5B, OR S 9.5C

BINDER COURSE = 5" OF I 19.0B OR B 25.0B OR THE APPLICATION OF BOTH BINDERS COURSES (I 19.0B ON TOP OF B 25.0B) ONLY 4" OF BINDER COURSE WHEN STAND-UP CURB IS INSTALLED.

AGGREGATE BASE COUSE = 8" OF A.B.C.

City of Asheville, NC Standard Specifications and Details Manual	STANDARD STREET SECTIONS (ALTERNATE ACCESS, ALLEY & LOW IMPACT)	REVISIONS DATE / DESCRIPTION	STD. NO. 3.02

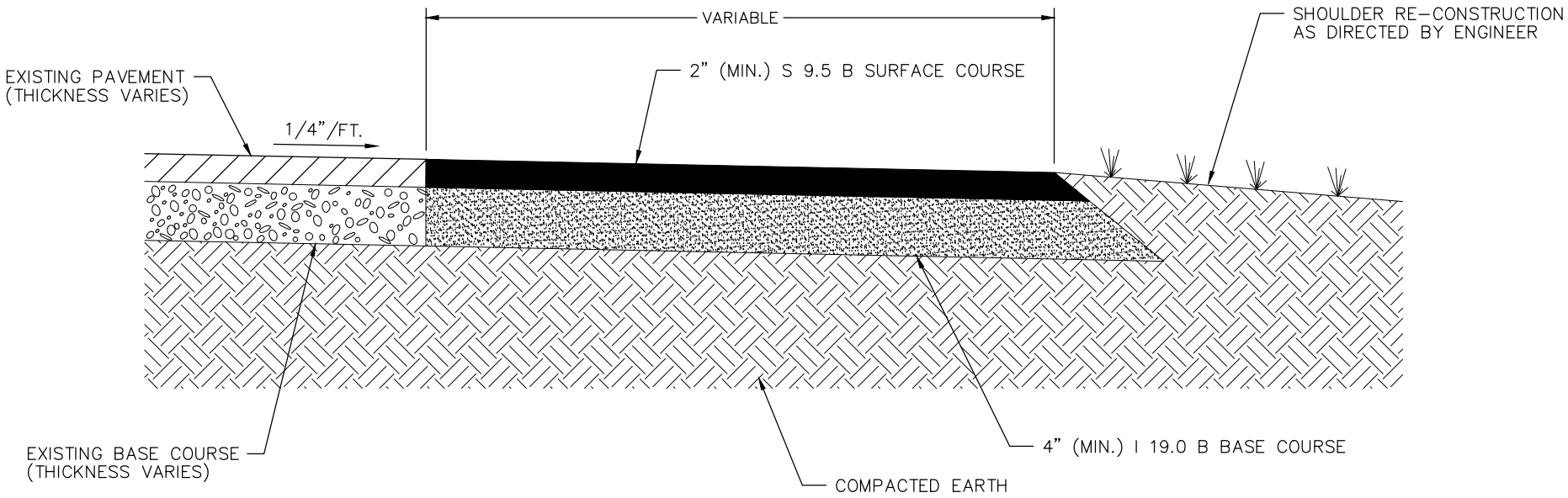

City of Asheville, NC Standard Specifications and Details Manual	ROADWAY WIDENING	REVISIONS DATE / DESCRIPTION	STD. NO. 3.03

NOTE:

1. EXISTING "ABC" IN ROADWAY MAY BE USED AS BASE COURSE AFTER COMPACTING TO ACHIEVE 100% PROCTOR. LOCALIZED UNDERCUTTING AND REPAIR SHALL BE REQUIRED WHERE PROOFROLLING RESULTS IN PUMPING OR AS DIRECTED BY THE INSPECTOR. TESTING OF SUBGRADE/"CABC" COMPACTION SHALL BE REQUIRED.

2. EXISTING ROADWAY PAVING SHALL BE SAW-CUT TO RECEIVE PLACEMENT OF GRADE BEAMS. A THREE-DAY CURING PERIOD SHALL BE REQUIRED FOR GRADE BEAMS PRIOR TO REMOVAL OF REMAINING BITUMINOUS PAVING. BASE BELOW GRADE BEAMS SHALL BE COMPACTED TO 100% PROCTOR.

3. BRICK PAVED STREETS SHALL NOT BE MAINTAINED BY THE CITY OF ASHEVILLE.

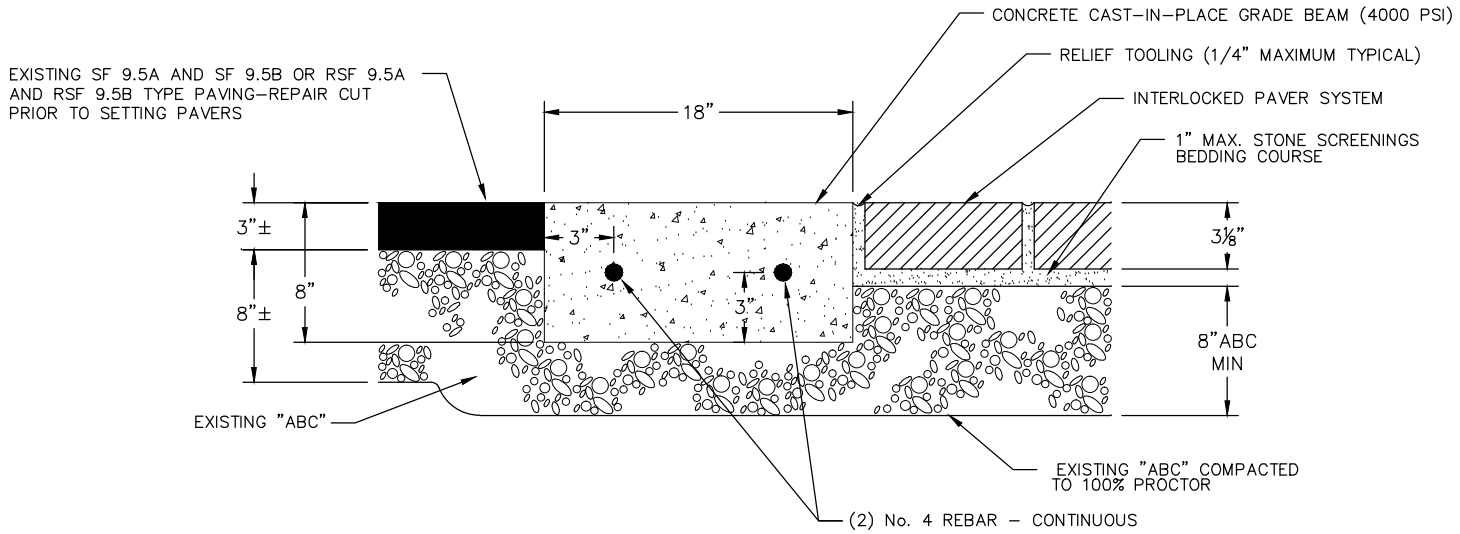

SECTIONAL VIEW

City of Asheville, NC Standard Specifications and Details Manual	INTERLOCKED CONCRETE PAVER STREET SECTION	REVISIONS DATE / DESCRIPTION	STD. NO. 3.04

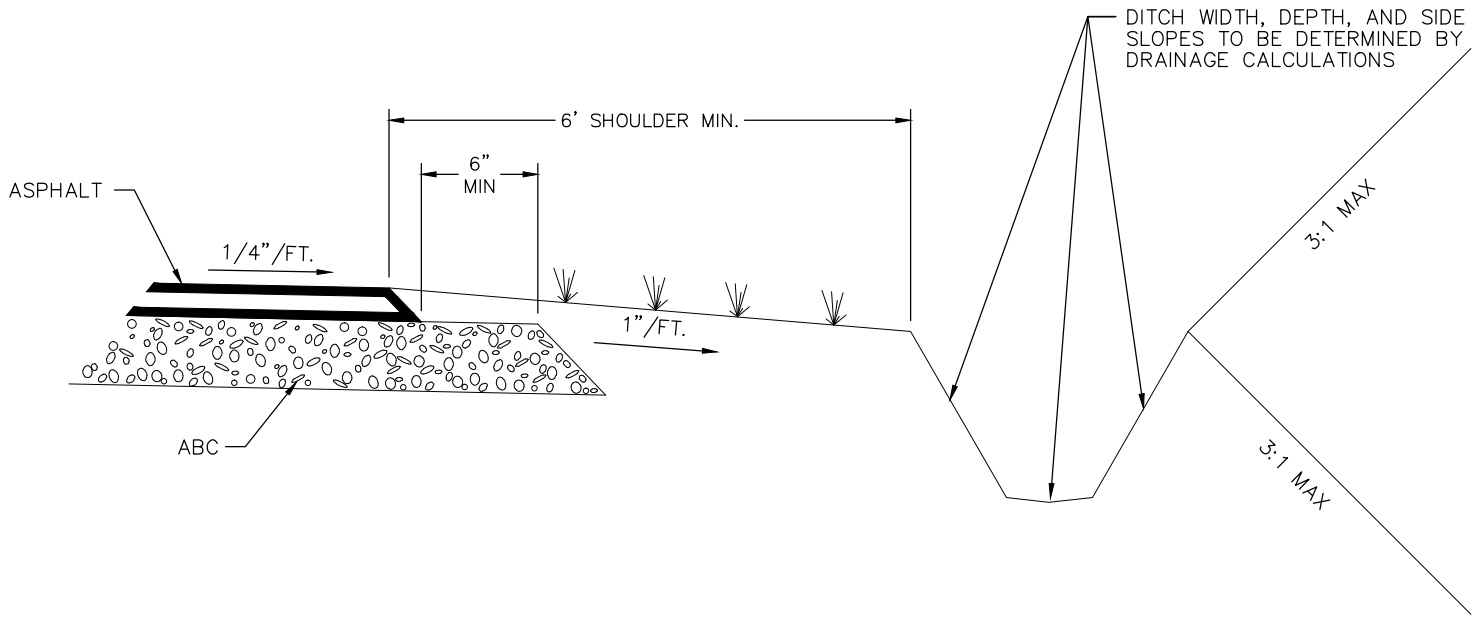

THIS SECTION MAY ONLY BE USED WHEN ALL OF THE FOLLOWING CONDITIONS ARE MET:

1. STREET VERTICAL GRADE SHALL NOT EXCEED 5% AT ANY POINT.
2. SWALE SYSTEM DESIGNED TO CARRY AT LEAST THE 10 YEAR STORM.
3. VELOCITY WITHIN THE SWALE SHALL BE NON-EROSIVE.
4. DETAILED DRAINAGE CALCULATIONS REQUIRED.

City of Asheville, NC Standard Specifications and Details Manual	STANDARD SECTION WITHOUT CURB & GUTTER	REVISIONS DATE / DESCRIPTION	STD. NO. 3.05

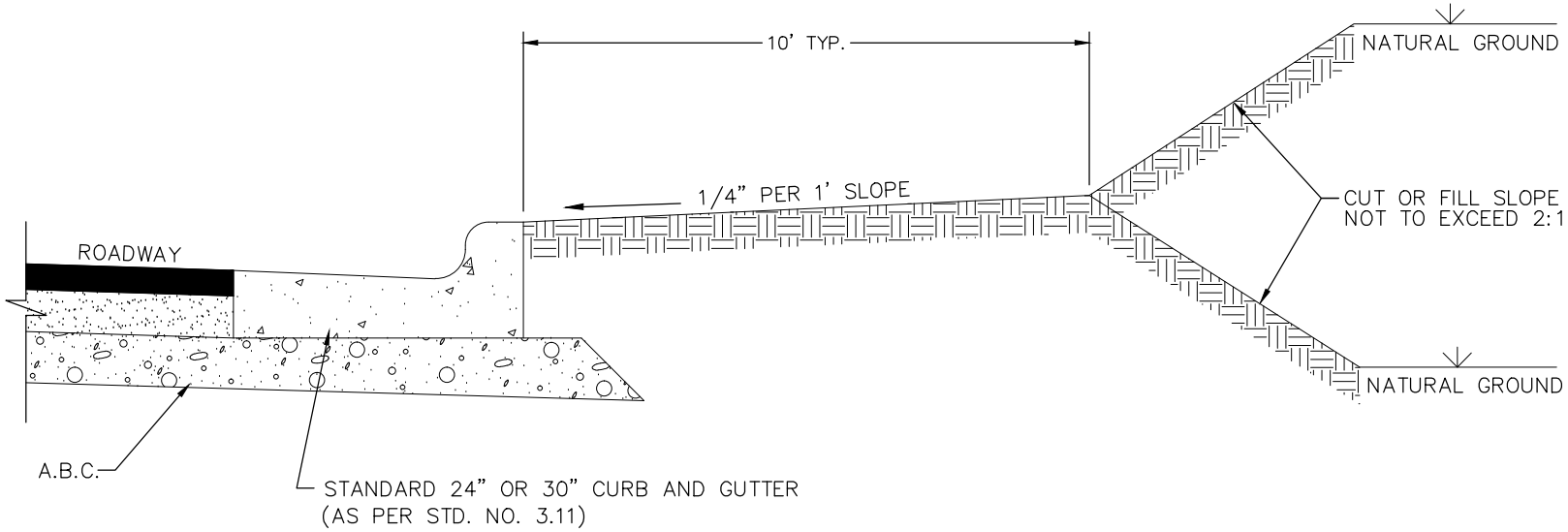

City of Asheville, NC Standard Specifications and Details Manual	STANDARD SHOULDER SECTION WITHOUT SIDEWALK	REVISIONS DATE / DESCRIPTION	STD. NO. 3.06

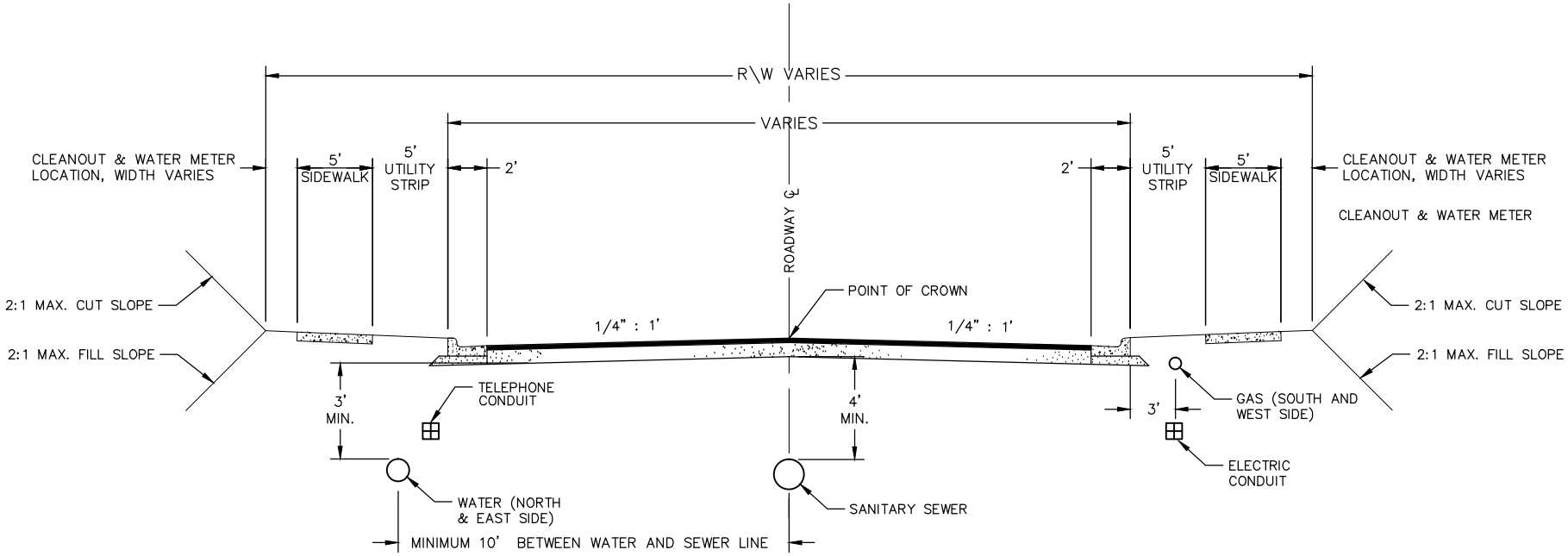

CROSS SECTION

N.T.S.

NOTE:

- THERE SHALL BE AN 18" VERTICAL SEPARATION BETWEEN WATER AND SEWER LINES
- WATER AND/OR SANITARY SEWER LINES SHALL BE A MINIMUM OF TWO (2) FEET FROM THE EDGE OF THE CURB AND GUTTER
- WATERLINE TRUST BLOCK MUST BE CONSTRUCTED TO THE MINIMUM DIMENSIONS AS PER CITY OF ASHEVILLE'S WATER RESOURCES SPECIFICATION MANUAL STANDARD DETAIL "THRUST BLOCK FOR TEES & RESTRAINING REQUIREMENTS FOR OTHER FITTINGS"

City of Asheville, NC Standard Specifications and Details Manual	STANDARD STREET CROSS SECTIONS SHOWING UTILITY LOCATIONS	REVISIONS		STD. NO.
		DATE	DESCRIPTION	3.07

NOTE

SMALLER RADIUS MAY BE APPROVED BY TRAFFIC ENGINEER

CUL–DE–SAC LENGTHS

A SHORT CUL–DE–SAC WILL HAVE A TOTAL LENGTH OF 500 FEET OR LESS, A LONG CUL–DE–SAC WILL HAVE A TOTAL LENGTH BETWEEN 501 AND 1,000 FEET.

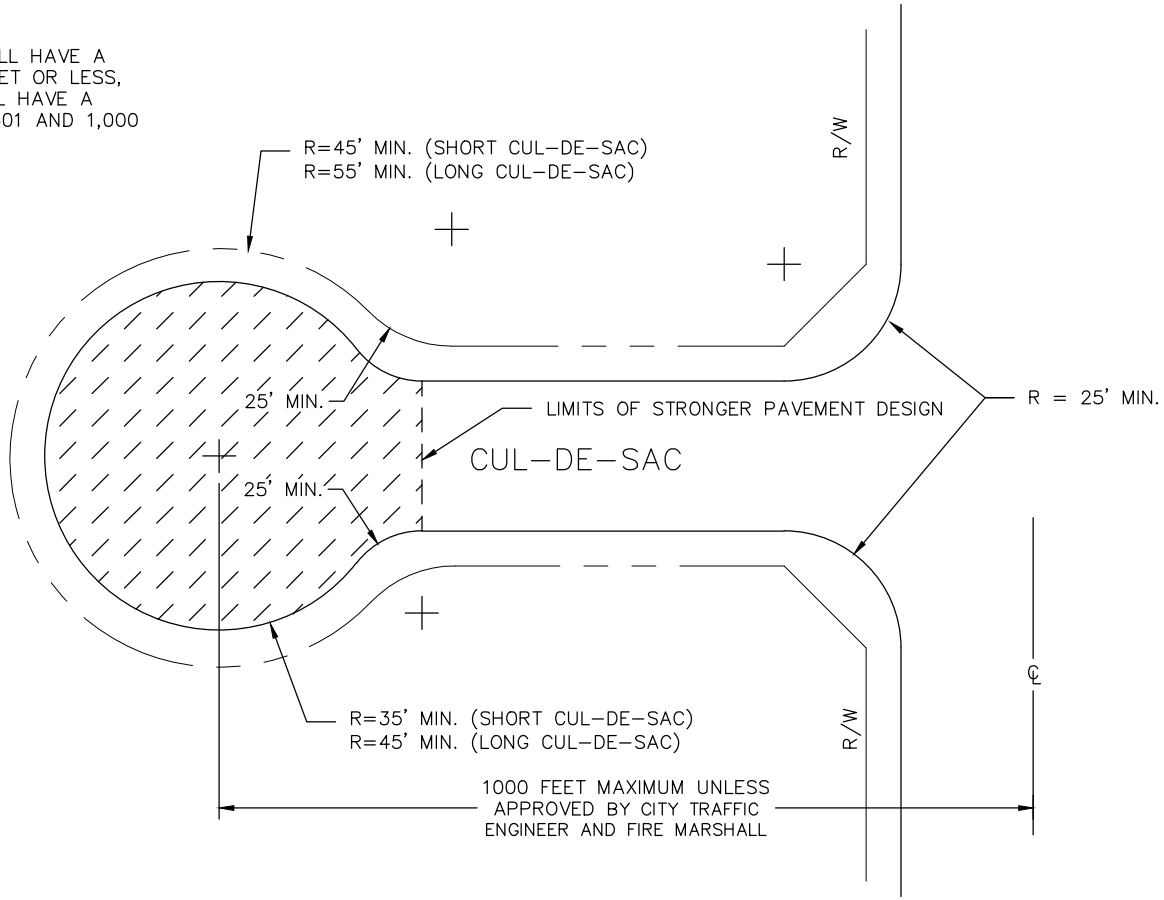

CUL–DE–SAC STRONGER PAVEMENT DESIGN

SURFACE COURSE = 2" OF SF 9.5A AND SF 9.5B OR RSF 9.5A AND RSF 9.5B
BINDER COUSE = 2" OF I 19.0B and B 25.0B
BASE COUSE = 8" OF A.B.C.

City of Asheville, NC Standard Specifications and Details Manual	CUL-DE-SAC DIMENSIONS	REVISIONS DATE / DESCRIPTION	STD. NO. 3.08

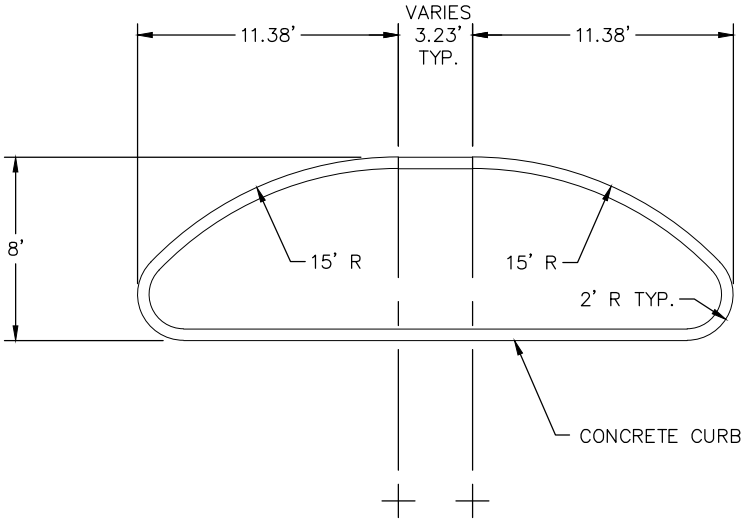

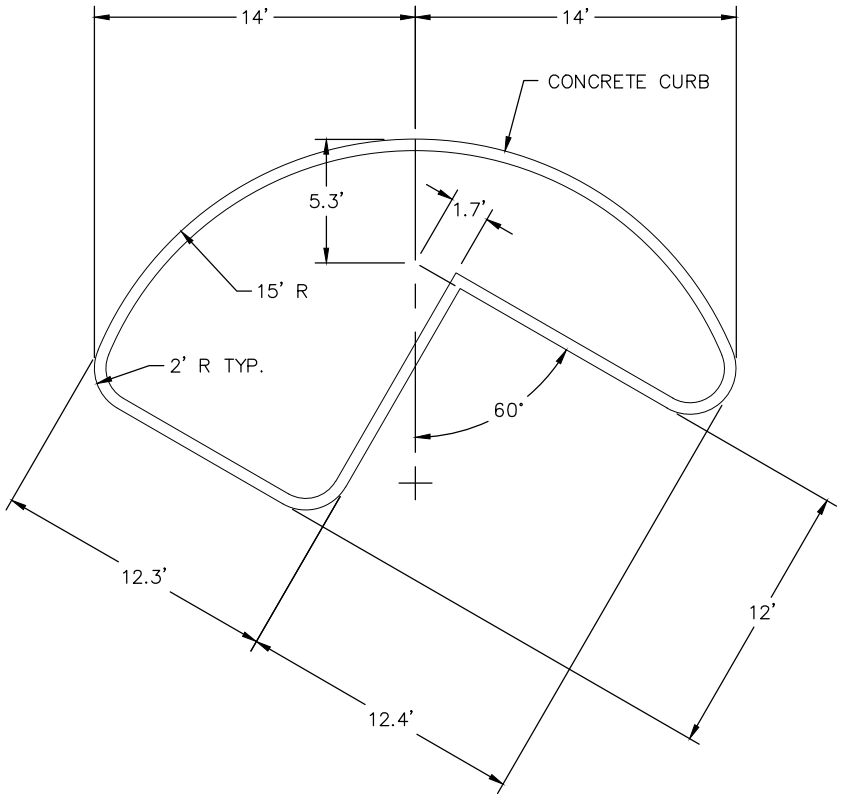

City of Asheville, NC

Standard Specifications and Details Manual

TYPICAL END ISLANDS FOR PARKING LOTS

REVISIONS	
DATE	DESCRIPTION

STD. NO.

3.09

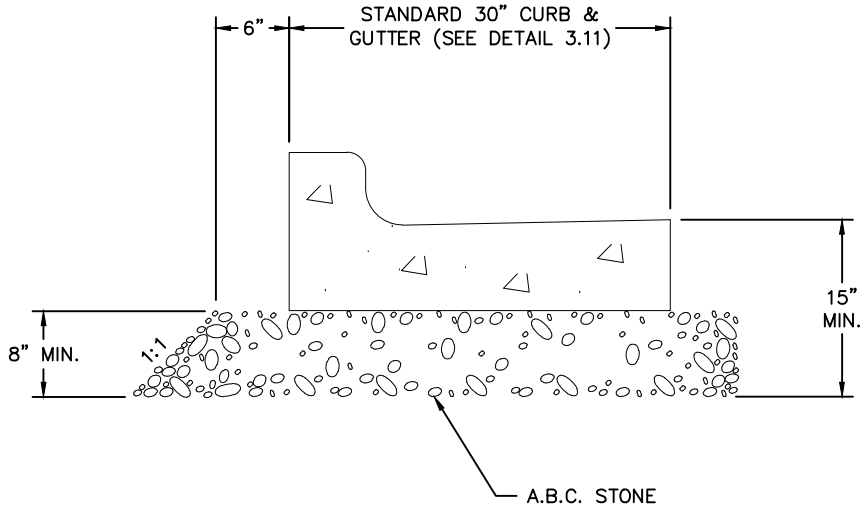

City of Asheville, NC

Standard Specifications
and Detais Manual

A.B.C. UNDER 2'-6"
CURB & GUTTER

REVISIONS	
DATE	DESCRIPTION

STD. NO.

3.10

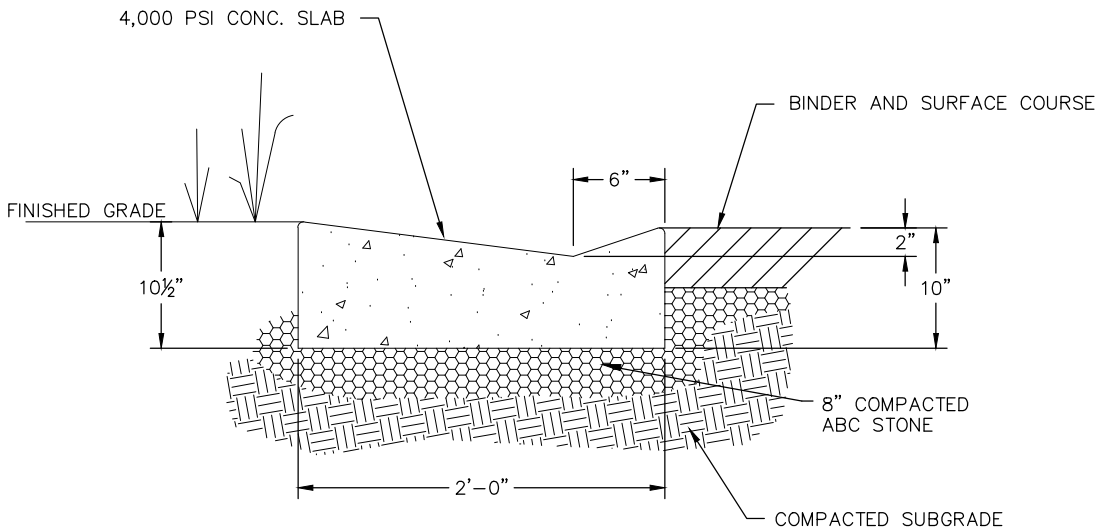

NOTE:

VALLEY CURB IS ONLY ALLOWED WHEN STREET GRADES DO NOT EXCEED 5% AND WHEN CONSISTENT WITH EXISTING CURBING IN THE AREA.

City of Asheville, NC Standard Specifications and Details Manual	VALLEY CURB DETAIL	REVISIONS DATE / DESCRIPTION	STD. NO. 3.10A

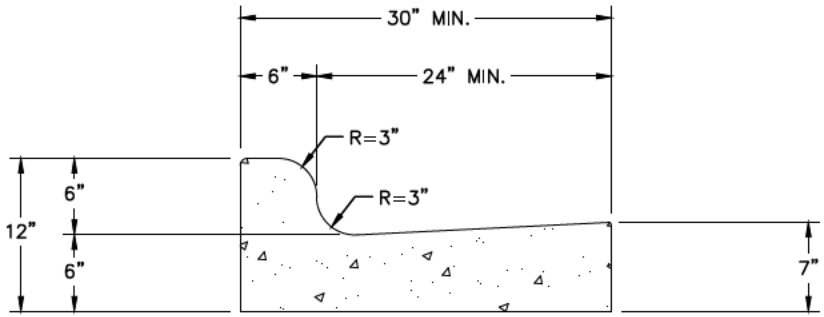

CURB & GUTTER
SECTION AA

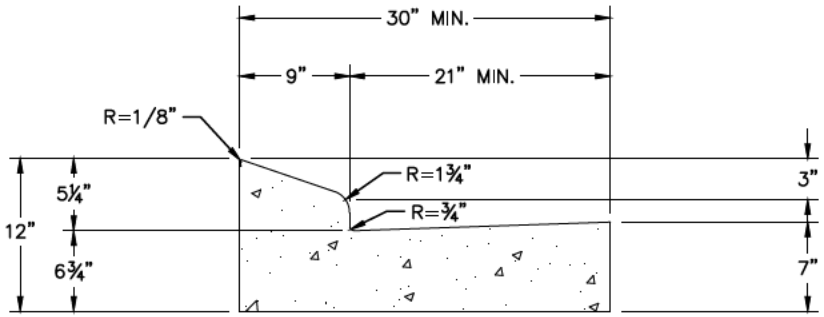

CURB & GUTTER
SECTION AA

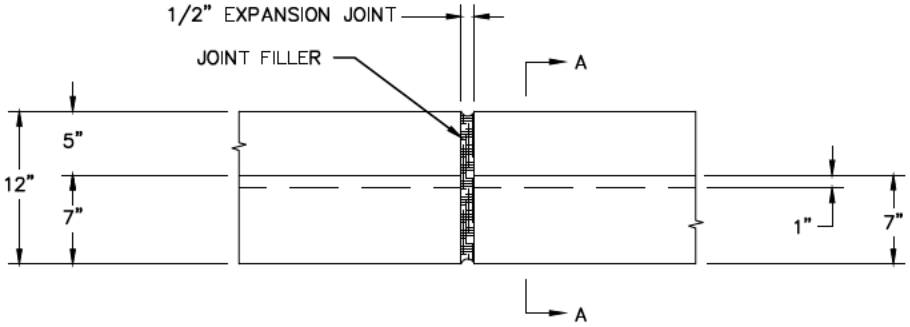

ELEVATION

NOTES:

1. CONCRETE SHALL BE 4,000 P.S.I.
2. A 1/2 INCH EXPANSION JOINT FILLED WITH JOINT FILLER SHALL BE PLACED NO FARTHER THAN 50 FEET APART OR AT ALL RIGID OBJECTS.
3. JOINT MATERIALS SHALL BE ACCORDANCE WITH THE JOINT MATERIALS SECTION OF THE MOST CURRENT NCDOT STANDARD SPECIFICATIONS FOR ROAD STRUCTURES MANUAL.
4. A NON SEALED 3/4 INCH DEEP TOOL JOINT SHALL BE PLACED EVERY 10 FEET UNLESS CONSTRUCTED WITH SIDEWALK THAT ABUTS BACK OF CURB, THEN TOOL JOINT SHALL BE PLACED AS SPACED AND INLINE WITH SIDEWALK TOOL JOINT.

City of Asheville, NC Standard Specifications and Details Maunual	STANDARD CONCRETE CURB AND GUTTER	REVISIONS		STD. NO.
		DATE	DESCRIPTION	3.11
		6/9/15	REVISED NOTE 4	

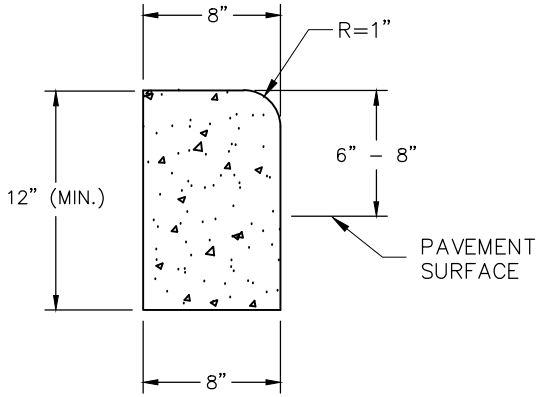

STANDARD STAND–UP CURB
(NON TRAFFIC BEARING)

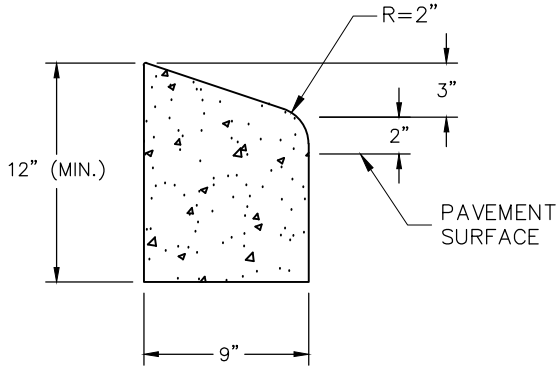

ONLY TO USED ADJACENT TO TRAFFIC
ISLANDS AND MOUNTABLE APRONS

MOUNTABLE CURB
(TRAFFIC BEARING)

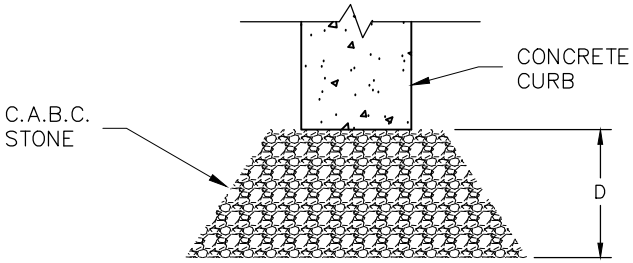

D = 6" MIN. FOR NON TRAFFIC BEARING
OR 8" MIN FOR TRAFFIC BEARING

C.A.B.C. STONE UNDER CURB

City of Asheville, NC **Standard Specifications and Details Manual**	**STANDARD STAND-UP & MOUNTABLE CURB**	REVISIONS DATE	DESCRIPTION	STD. NO. **3.11A**

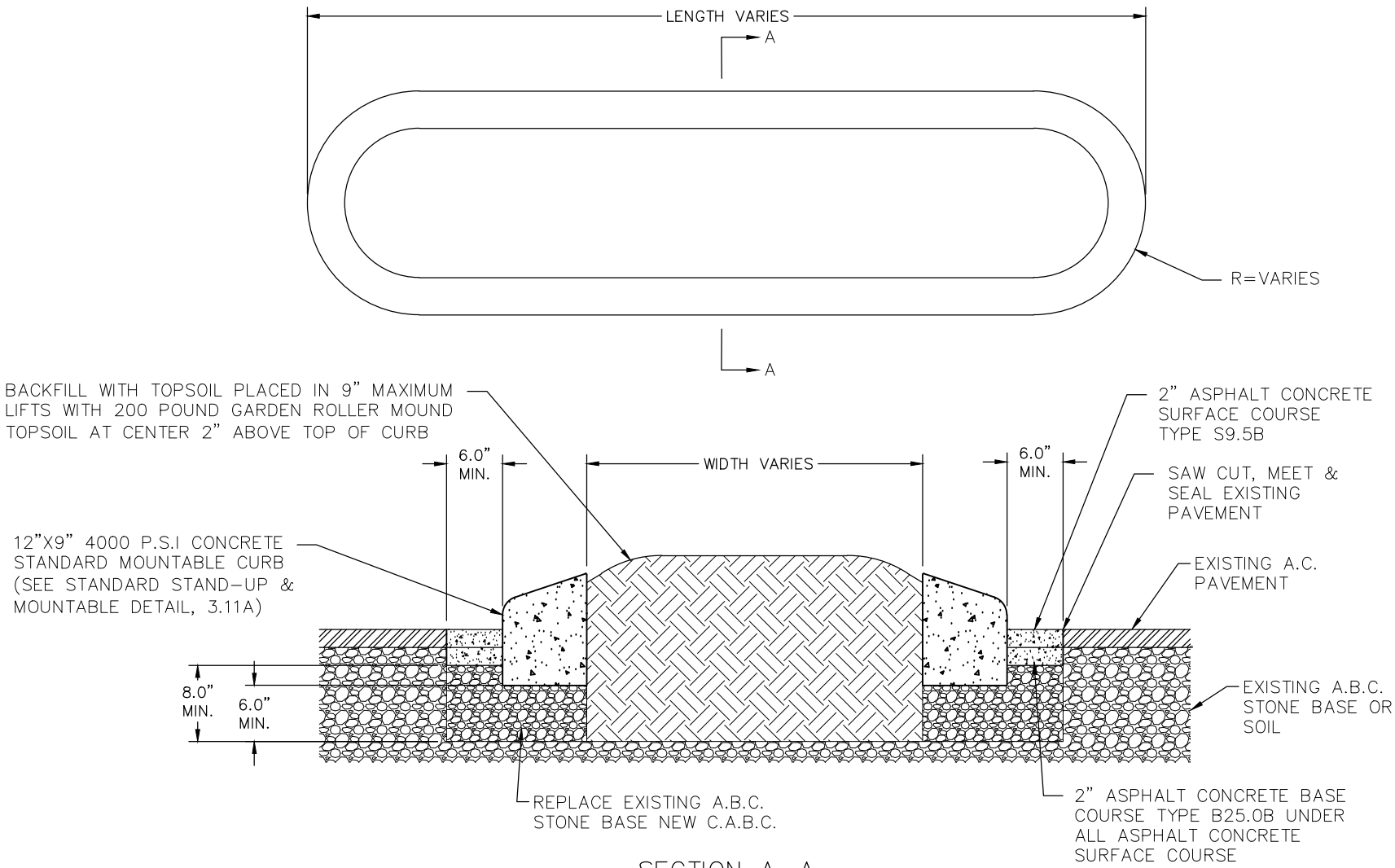

SECTION A–A

City of Asheville, NC Standard Specifications and Details Mainual	MEDIAN ISLAND w/STANDARD MOUNTABLE CURB	REVISIONS DATE / DESCRIPTION	STD. NO. 3.11B

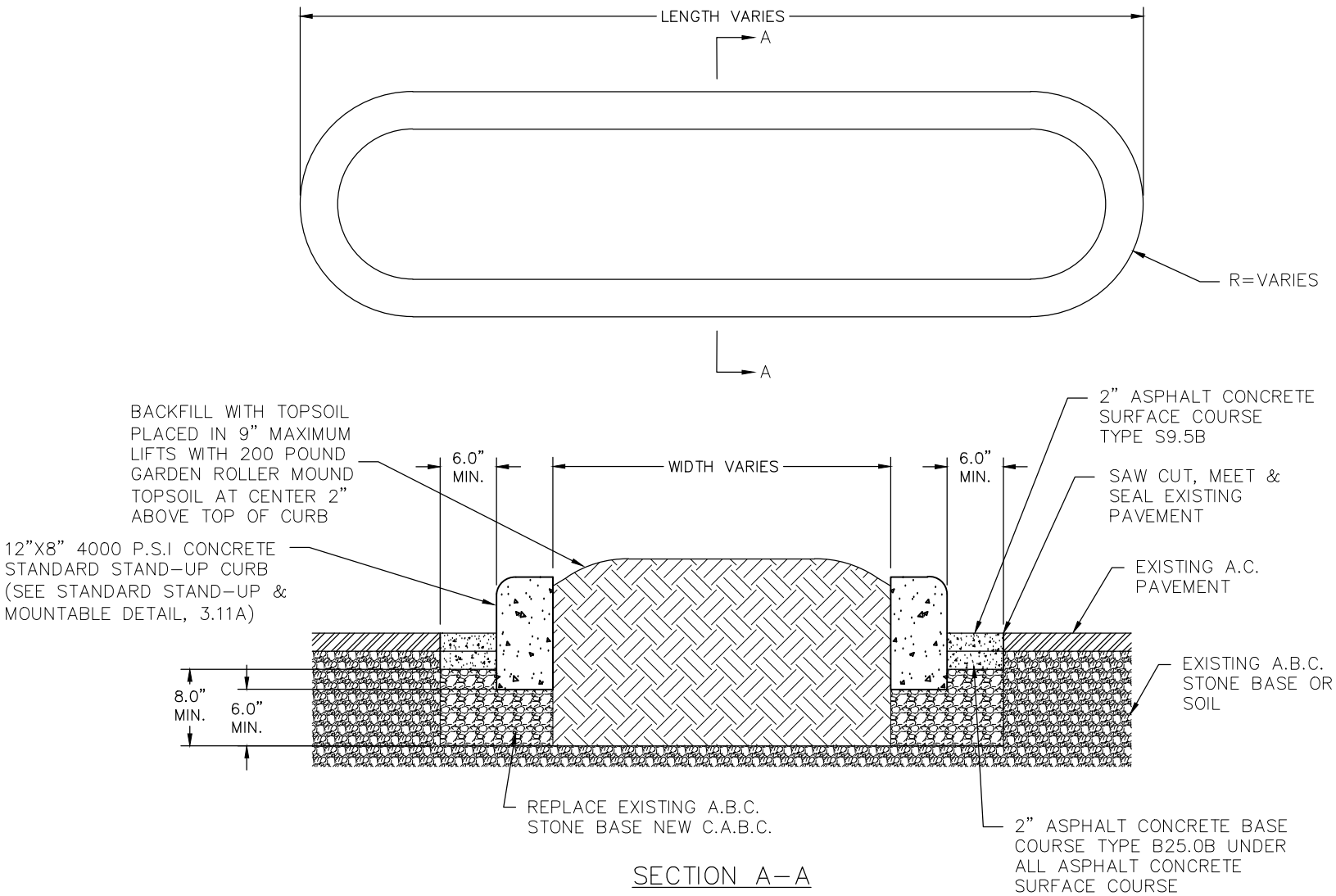

City of Asheville, NC Standard Specifications and Details Manual	MEDIAN ISLAND w/STANDARD STAND-UP CURB	REVISIONS DATE / DESCRIPTION	STD. NO. 3.11C

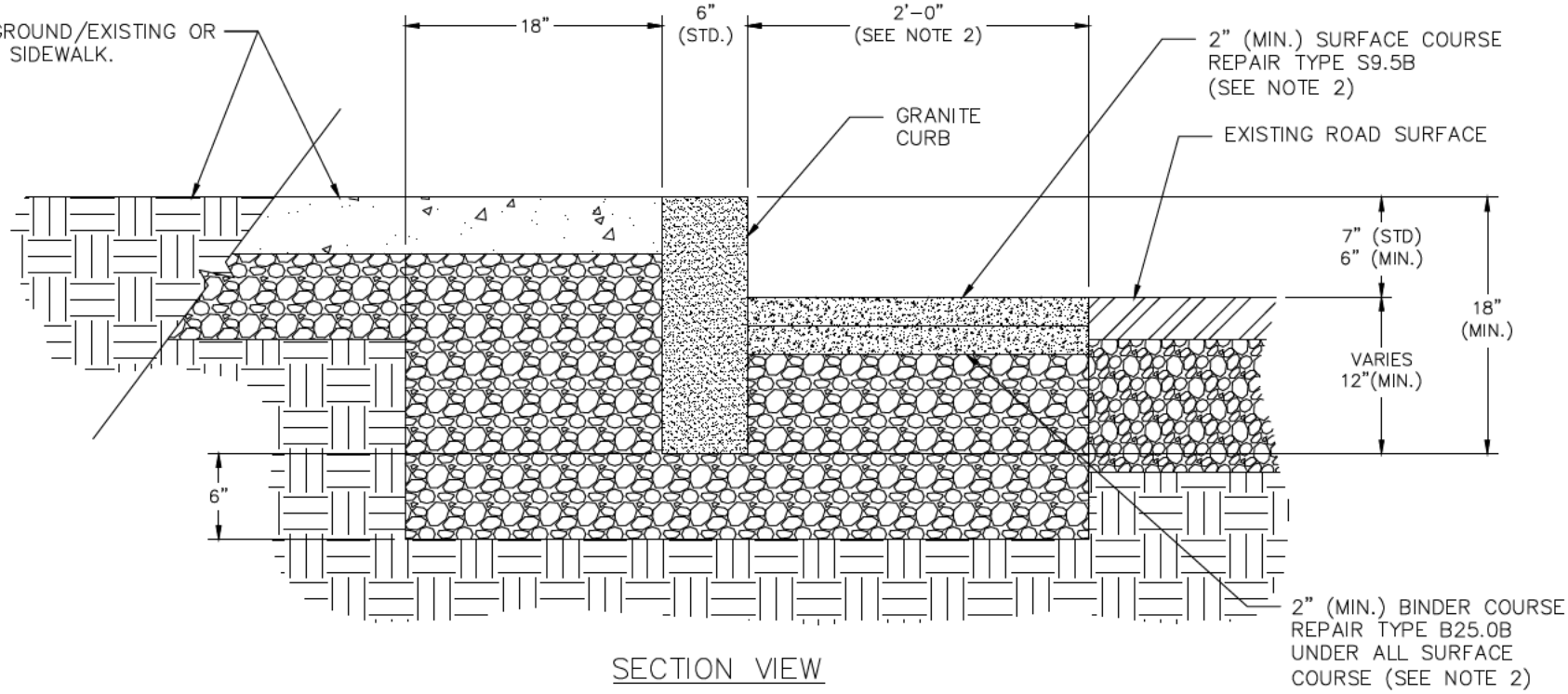

SECTION VIEW

NOTES:

1. GRANITE CURB TO BE INSTALLED OR REPLACED AS REQUIRED IN THE CITY'S OF CENTRAL BUSINESS DISTRICT.
2. ALL EXPOSED CURB SURFACE TO BE FREE OF ANY AND ALL DEBRIS, INCLUDING ASPHALT AND CONCRETE..
3. THE 2'-0" SAW CUT, REMOVAL, AND THE REPAIR OF ABC STONE, BINDER, SURFACE COURSE FROM FACE OF CURB IS ONLY FOR THE INSTALLATION OF THE GRANITE CURB ADJACENT TO AN EXISTING STREET.

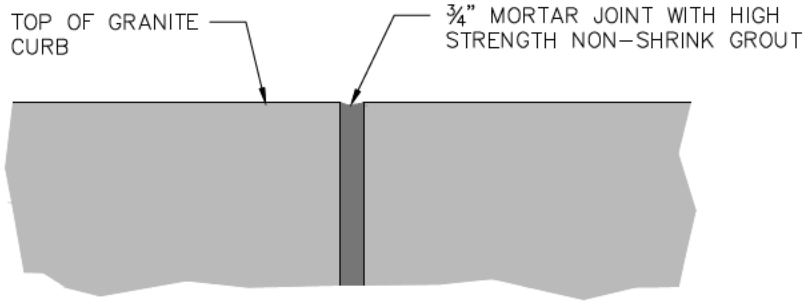

CURB FACE VIEW

City of Asheville, NC
Standard Specifications and Details Manual

GRANITE CURB INSTALLATION

REVISIONS	
DATE	DESCRIPTION

STD. NO.
3.11D

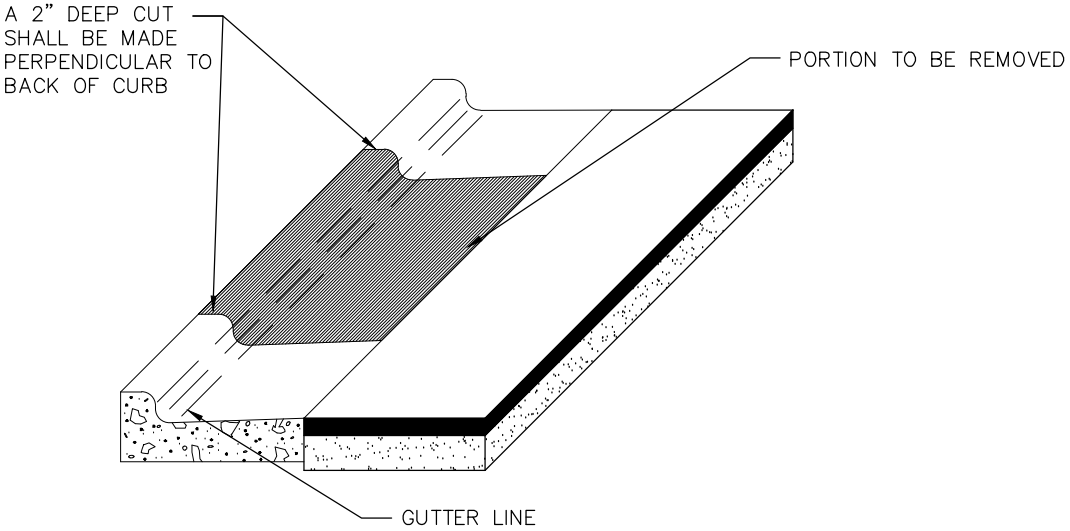

STEP ONE

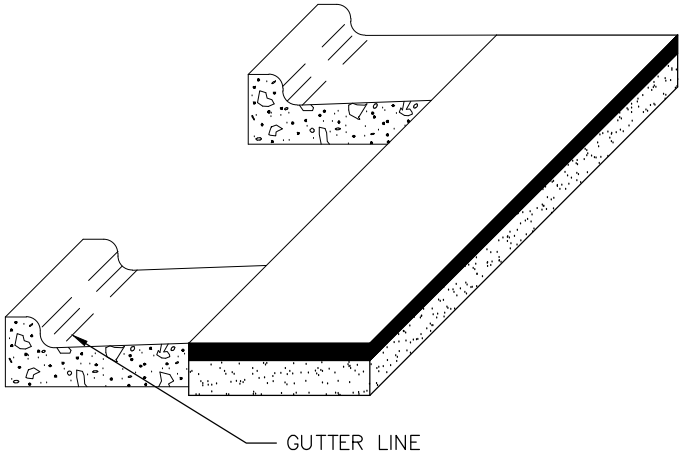

STEP TWO

NOTE:

CURB AND GUTTER SECTION SHALL BE REMOVED IN ACCORDANCE WITH DRIVEWAY WIDTH APPROVED BY THE CITY OF ASHEVILLE.

IF PERPENDICULAR CUT IS WITHIN 12" FROM A JOINT, THEN THE PARALLEL CUT SHALL BE MADE TO THAT JOINT.

City of Asheville, NC Standard Specifications and Details Manual	STANDARD METHOD OF REMOVING EXISTING CURB FOR A DRIVEWAY APRON INSTALLATION	REVISIONS DATE / DESCRIPTION	STD. NO. 3.12

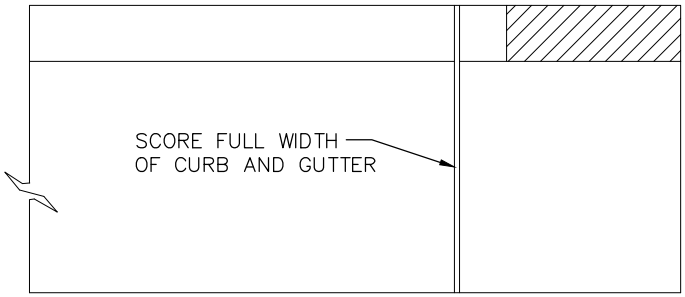

PLAN

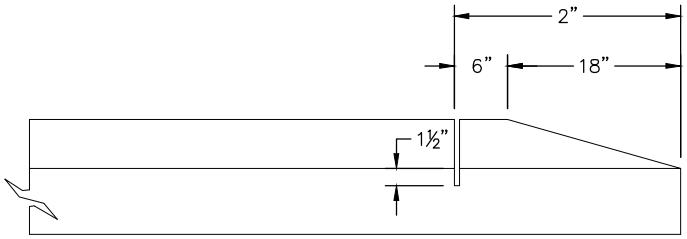

FRONT

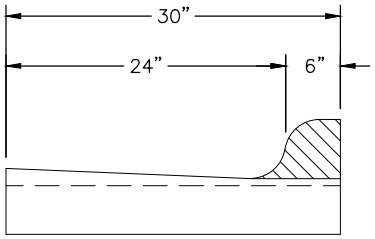

END

City of Asheville, NC Standard Specifications and Details Manual	STANDARD METHOD OF ENDING CURB AND GUTTER	REVISIONS DATE / DESCRIPTION	STD. NO. 3.13

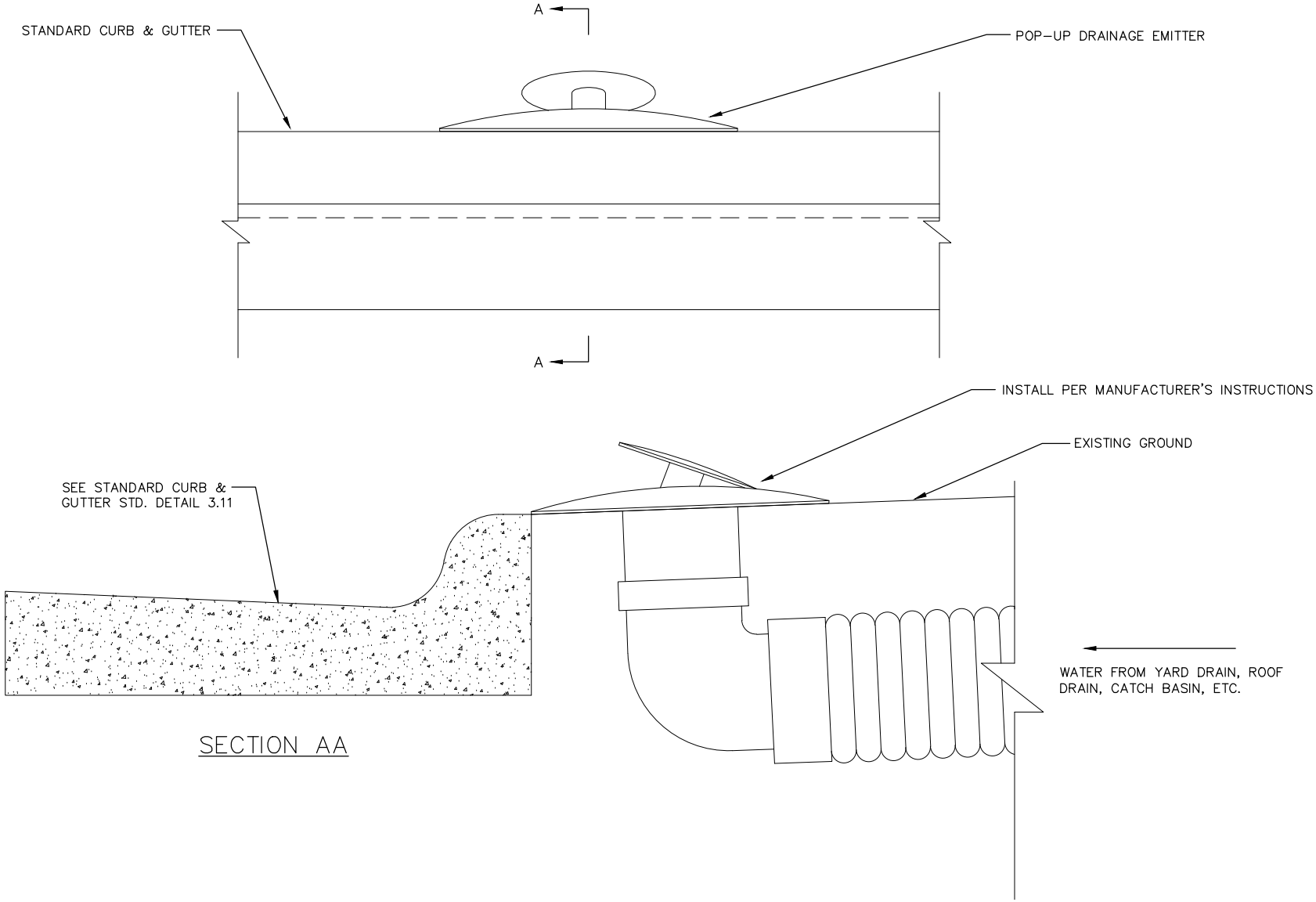

City of Asheville, NC

Standard Specifications and Details Manual

POP-UP DRAINAGE EMITTER

REVISIONS	
DATE	DESCRIPTION

STD. NO.

3.14

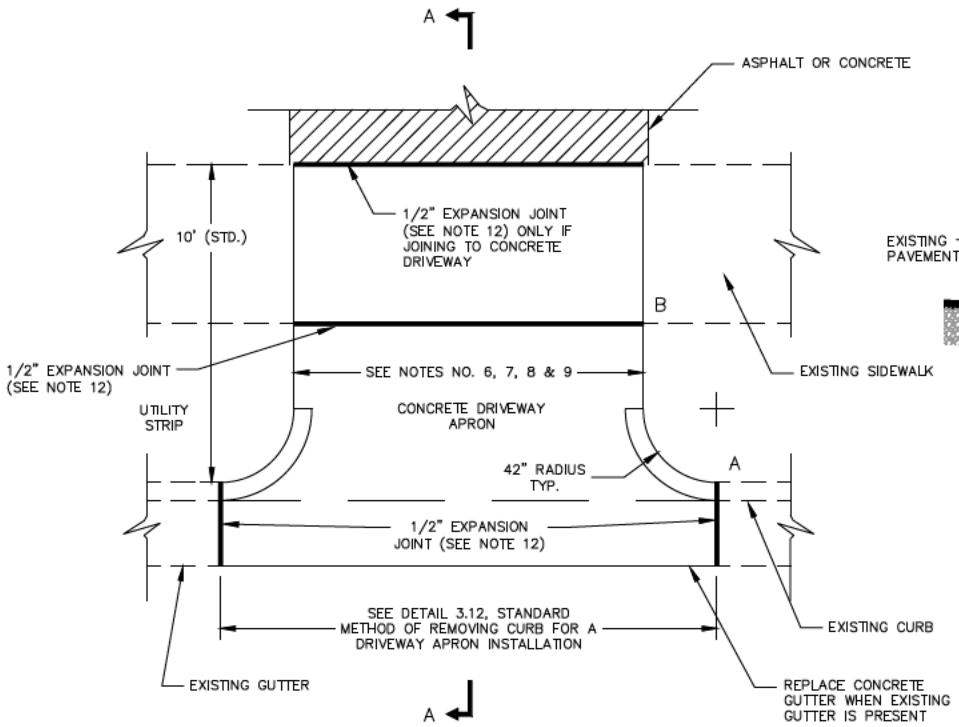

PLAN
NOT TO SCALE

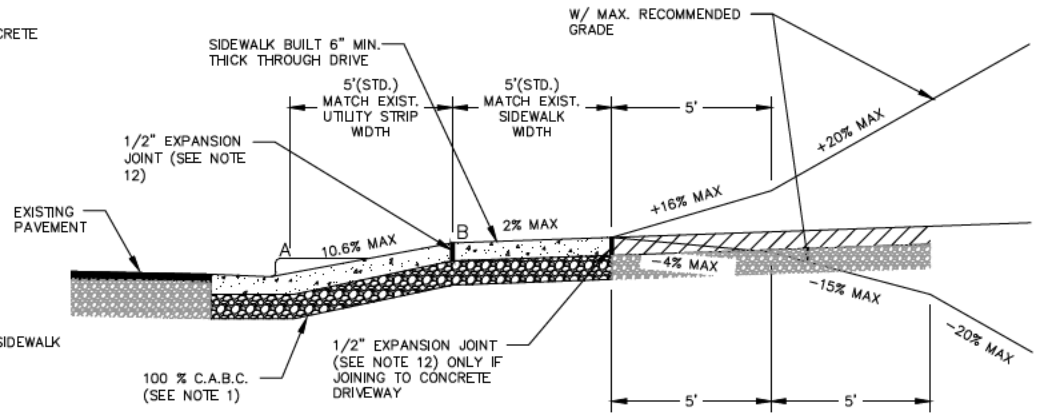

SECTION AA
NOT TO SCALE

NOTES:

1. RESIDENTIAL AND COMMERCIAL DRIVEWAYS – 6" OF 100% CABC WITH 6" CONCRETE FOR FULL LENGTH & DEPTH OF DRIVEWAY APRON.
2. MAXIMUM DRIVEWAY APRON SLOPE BEGINING AT CURB TO BE 10.6% UNLESS OTHERWISE APPROVED BY INSPECTOR.
3. CURB SHALL BE TAPERED TO FINISH FLUSH WITH SIDEWALK.
4. RADIUS SHALL NOT ENCROACH ON TO ADJACENT PROPERTIES.
5. ACCESS APRON DEPTH MAY VARY DEPENDING ON WIDTH OF UTILITY STRIP.
6. WHERE SIDEWALK IS EXISTING APRON MUST EXTEND 10' PAST SIDEWALK. THIS SECTION MAY BE ASPHALT OR CONCRETE.
7. RESIDENTIAL DRIVEWAYS TO BE 12 FT TO 18 FT IN WIDTH.
8. COMMERCIAL AND INDUSTRIAL (ONE–WAY) DRIVEWAYS TO BE 14 FT TO 20 FT IN WIDTH.
9. COMMERCIAL AND INDUSTRIAL (TWO–WAY) DRIVEWAYS TO BE 24 FT TO 36 FT IN WIDTH.
10. ALL CONCRETE SHALL BE A MINIMUM OF 4000 P.S.I.
11. ELEV. "B" MINUS ELEV. "A" MUST NOT BE THAN LESS 1 INCH.
12. ½ INCH EXPANSION JOINTS TO BE FILLED WITH JOINT FILLER AND SEALER PLACED BETWEEN ALL RIGID OBJECTS AS SHOWN EXTENDING TO THE FULL DEPTH OF THE CONCRETE WITH THE TOP OF THE FILLER ½ INCH BELOW THE FINISHED SURFACE. JOINT FILLER MATERIALS SHALL BE IN ACCORDANCE WITH THE "JOINT MATERIALS" SECTION OF THE MOST CURRENT NCDOT STANDARD SPECIFICATIONS FOR ROAD STRUCTURES MANUAL.

City of Asheville, NC Standard Specifications and Details Manual	STANDARD DRIVEWAY APRON WITH SIDEWALK & UTILITY STRIP	REVISIONS		STD. NO.
		DATE	DESCRIPTION	3.15
		6/9/15	REVISED APRON CURB NG	

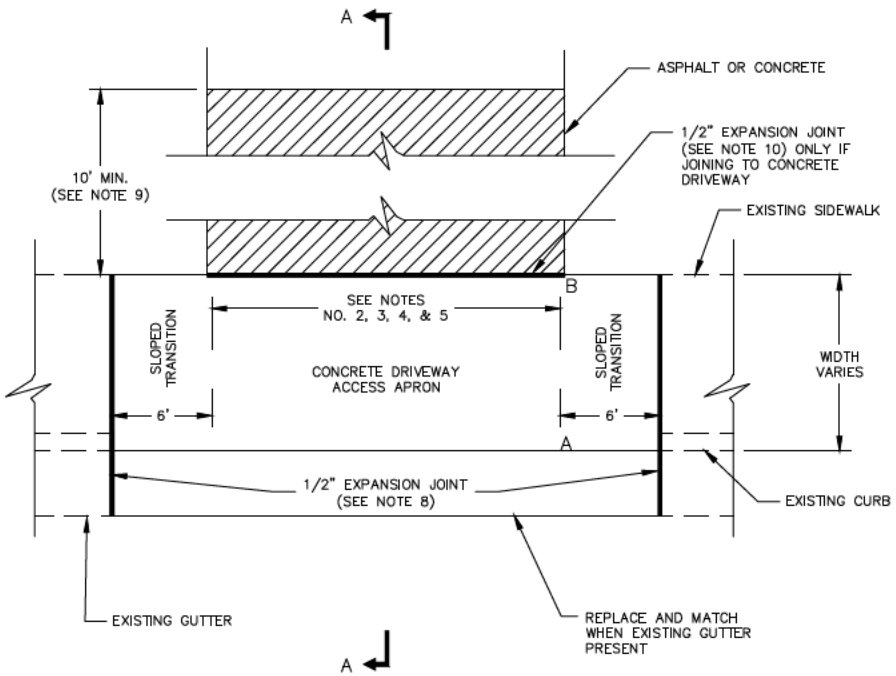

PLAN
NOT TO SCALE

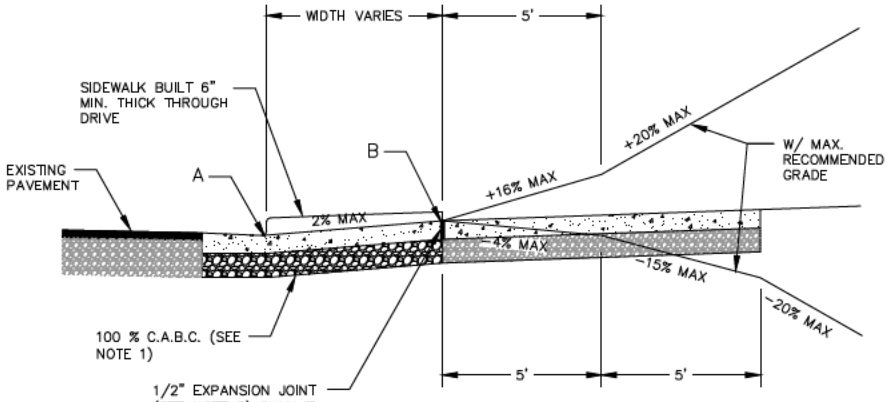

SECTION AA
NOT TO SCALE

NOTES:

1. RESIDENTIAL AND COMMERCIAL DRIVEWAYS – 6" OF 100% CABC WITH 6" CONCRETE FOR FULL LENGTH & DEPTH OF DRIVEWAY APRON.
2. WHERE SIDEWALK IS OR TO BE INSTALLED, DRIVEWAY APRON MUST EXTEND A MINIMUM OF 10' PAST SIDEWALK. THIS SECTION MAY BE CONCRETE OF ASPHALT.
3. RESIDENTIAL DRIVEWAYS TO BE 12' TO 18' IN WIDTH.
4. COMMERCIAL ACCESS APRON (ONE–WAY) DRIVEWAYS TO BE 14 FT TO 20 FT IN WIDTH.
5. COMMERCIAL ACCESS APRON (TWO–WAY) DRIVEWAYS TO BE 24 FT TO 36 FT IN WIDTH.
6. ALL CONCRETE SHALL BE A MINIMUM OF 4000 P.S.I.
7. ELEV. "B" MINUS ELEV. "A" EQUALS 1 INCH.
8. ½ INCH EXPANSION JOINTS TO BE FILLED WITH JOINT FILLER AND SEALER PLACED BETWEEN ALL RIGID OBJECTS AS SHOWN EXTENDING TO THE FULL DEPTH OF THE CONCRETE WITH THE TOP OF THE FILLER ½ INCH BELOW THE FINISHED SURFACE. JOINT FILLER MATERIALS SHALL BE IN ACCORDANCE WITH THE "JOINT MATERIALS" SECTION OF THE MOST CURRENT NCDOT STANDARD SPECIFICATIONS FOR ROAD STRUCTURES MANUAL.
9. IF CITY OR CONTRACTED STAFF IS CONSTRUCTING THE DRIVEWAY ACCESS APRON, CONSTRUCTION WILL NOT EXTEND OUTSIDE THE LIMITS OF THE EXISTING ROAD RIGHT–OF–WAY, UNLESS APPROPRIATE EASEMENT OR RIGHT OF ENTRY IS GIVEN TO THE CITY BY PROPERTY OWNER.

City of Asheville, NC Standard Specifications and Details Manual	STANDARD DRIVEWAY ACCESS APRON WITH SIDEWALK ADJACENT TO CURB	REVISIONS		STD. NO.
		DATE	DESCRIPTION	3.15A
		6/9/15	ADDED NOTE 9	

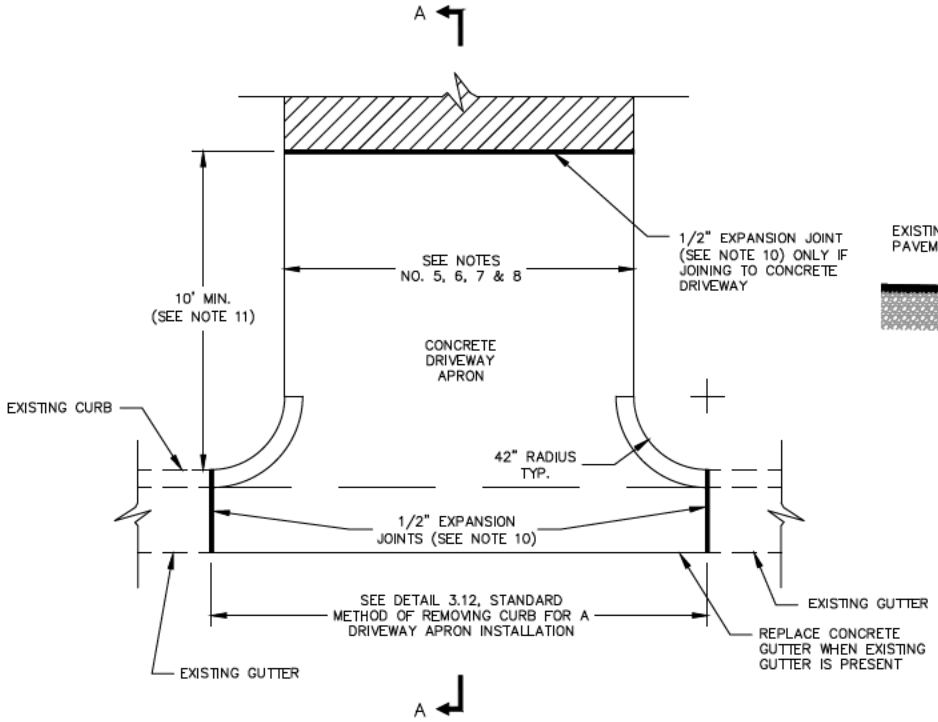

PLAN
NOT TO SCALE

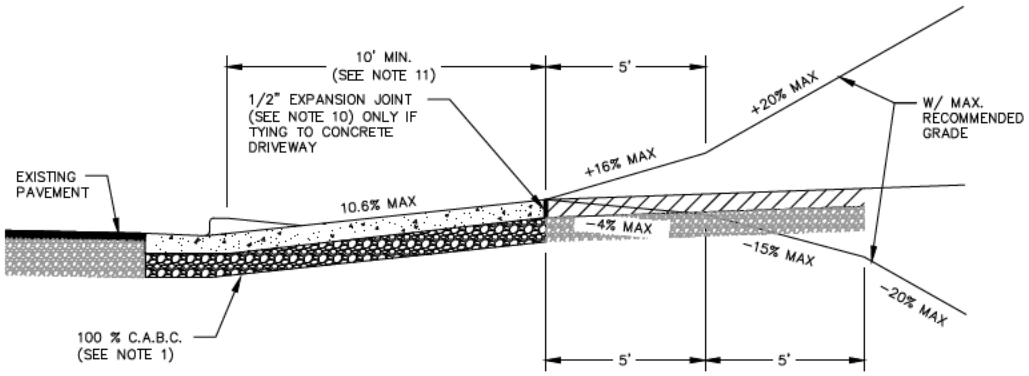

SECTION AA
NOT TO SCALE

NOTES:

1. RESIDENTIAL AND COMMERCIAL DRIVEWAYS – 6" OF 100% CABC WITH 6" CONCRETE FOR FULL LENGTH & DEPTH OF DRIVEWAY APRON.
2. MAXIMUM DRIVEWAY APRON SLOPE BEGINING AT CURB TO BE 10.6% UNLESS OTHERWISE APPROVED BY INSPECTOR.
3. RADII SHALL NOT ENCROACH ONTO ADJACENT PROPERTIES.
4. SIDEWALK SECTION SHALL NOT BE REQUIRED ALONG STREETS WHICH ARE NOT PLANNED FOR SIDEWALK.
5. DRIVEWAY APRON MUST EXTEND A MINIMUM OF 10 FT FROM BACK OF CURB.
6. RESIDENTIAL DRIVEWAYS TO BE 12 FT TO 18 FT IN WIDTH.
7. COMMERCIAL ACCESS APRON (ONE–WAY) DRIVEWAYS TO BE 14 FT TO 20 FT IN WIDTH.
8. COMMERCIAL ACCESS APRON (TWO–WAY) DRIVEWAYS TO BE 24 FT TO 36 FT IN WIDTH.
9. ALL CONCRETE SHALL BE A MINIMUM OF 4000 P.S.I.
10. INCH EXPANSION JOINTS TO BE FILLED WITH JOINT FILLER AND SEALER PLACED BETWEEN ALL RIGID OBJECTS AS SHOWN EXTENDING TO THE FULL DEPTH OF THE CONCRETE WITH THE TOP OF THE FILLER ½ INCH BELOW THE FINISHED SURFACE. JOINT FILLER MATERIALS SHALL BE IN ACCORDANCE WITH THE "JOINT MATERIALS" SECTION OF THE MOST CURRENT NCDOT STANDARD SPECIFICATIONS FOR ROAD STRUCTURES MANUAL.
11. IF CITY OR CONTRACTED STAFF IS CONSTRUCTING THE DRIVEWAY ACCESS APRON, CONSTRUCTION WILL NOT EXTEND OUTSIDE THE LIMITS OF THE EXISTING ROAD RIGHT–OF–WAY, UNLESS APPROPRIATE EASEMENT OR RIGHT OF ENTRY IS GIVEN TO THE CITY BY PROPERTY OWNER.

City of Asheville, NC
Standard Specifications and Details Manual

STANDARD DRIVEWAY ACCESS APRON WITH CURB & GUTTER & WITHOUT SIDEWALK

REVISIONS

DATE	DESCRIPTION
6/9/15	ADDED NOTE 11
6/9/15	REVISED APRON CURB NG

STD. NO.
3.15B

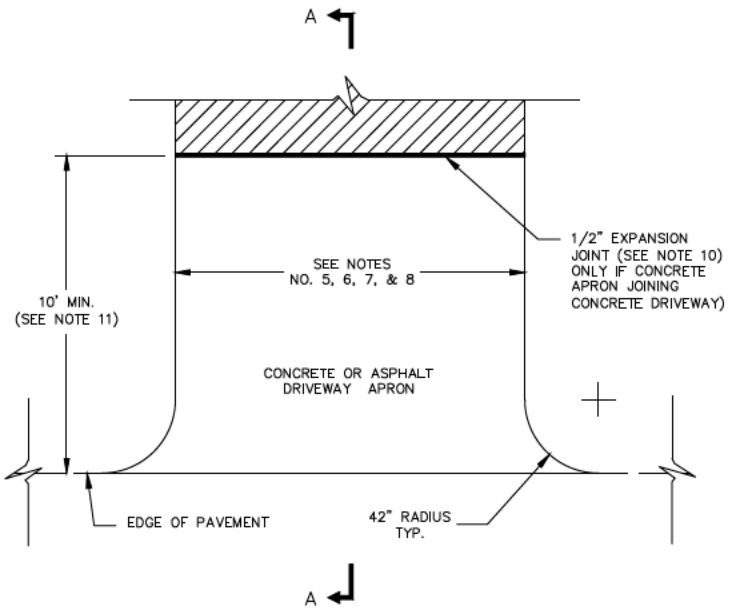

PLAN
NOT TO SCALE

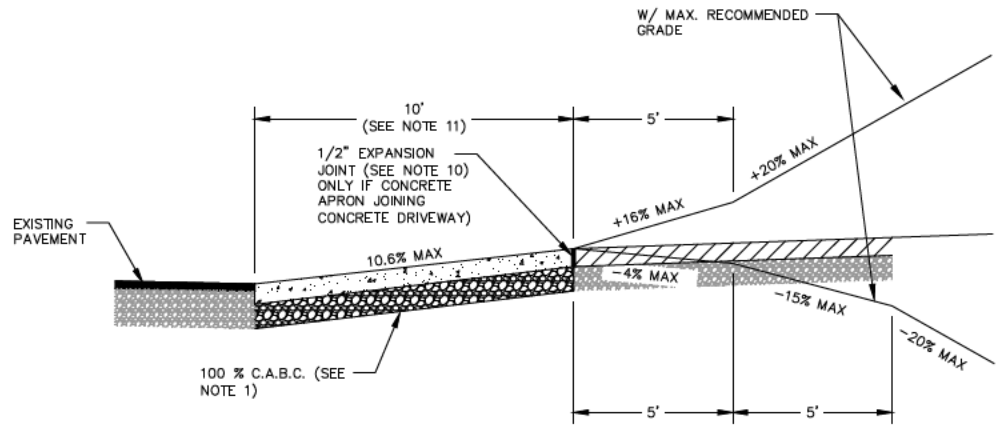

SECTION AA
NOT TO SCALE

NOTES:

1. RESIDENTIAL AND COMMERCIAL DRIVEWAYS – 6" OF 100% CABC WITH 6" CONCRETE FOR FULL LENGTH & DEPTH OF DRIVEWAY APRON.
2. MAXIMUM DRIVEWAY APRON SLOPE BEGINING AT EDGE OF PAVEMENT TO BE 10.6% UNLESS OTHERWISE APPROVED BY INSPECTOR.
3. RADII SHALL NOT ENCROACH ONTO ADJACENT PROPERTIES.
4. SIDEWALK SECTION SHALL NOT BE REQUIRED ALONG STREETS WHICH ARE NOT PLANNED FOR SIDEWALK.
5. DRIVEWAY APRON MUST EXTEND A MINIMUM OF 10 FT FROM EDGE OF PAVEMENT.
6. RESIDENTIAL DRIVEWAYS TO BE 12 FT TO 18 FT IN WIDTH.
7. COMMERCIAL ACCESS APRON (ONE–WAY) DRIVEWAYS TO BE 14 FT TO 20 FT IN WIDTH.
8. COMMERCIAL ACCESS APRON (TWO–WAY) DRIVEWAYS TO BE 24 FT TO 36 FT IN WIDTH.
9. ALL CONCRETE SHALL BE A MINIMUM OF 4000 P.S.I.
10. INCH EXPANSION JOINTS TO BE FILLED WITH JOINT FILLER AND SEALER PLACED BETWEEN ALL RIGID OBJECTS AS SHOWN EXTENDING TO THE FULL DEPTH OF THE CONCRETE WITH THE TOP OF THE FILLER ½ INCH BELOW THE FINISHED SURFACE. JOINT FILLER MATERIALS SHALL BE IN ACCORDANCE WITH THE "JOINT MATERIALS" SECTION OF THE MOST CURRENT NCDOT STANDARD SPECIFICATIONS FOR ROAD STRUCTURES MANUAL.
11. IF CITY OR CONTRACTED STAFF IS CONSTRUCTING THE DRIVEWAY ACCESS APRON, CONSTRUCTION WILL NOT EXTEND OUTSIDE THE LIMITS OF THE EXISTING ROAD RIGHT–OF–WAY, UNLESS APPROPRIATE EASEMENT OR RIGHT OF ENTRY IS GIVEN TO THE CITY BY PROPERTY OWNER.

City of Asheville, NC
Standard Specifications and Details Manual

STANDARD DRIVEWAY ACCESS APRON WITHOUT CURB & WITHOUT SIDEWALK

REVISIONS	
DATE	DESCRIPTION
6/9/15	ADDED NOTE 11

STD. NO.
3.15C

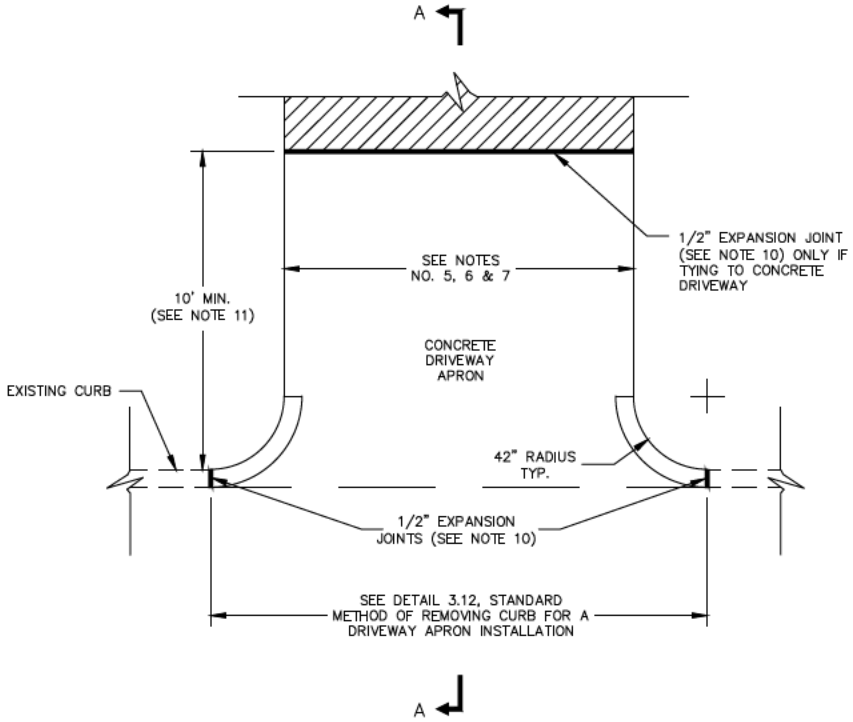

PLAN
NOT TO SCALE

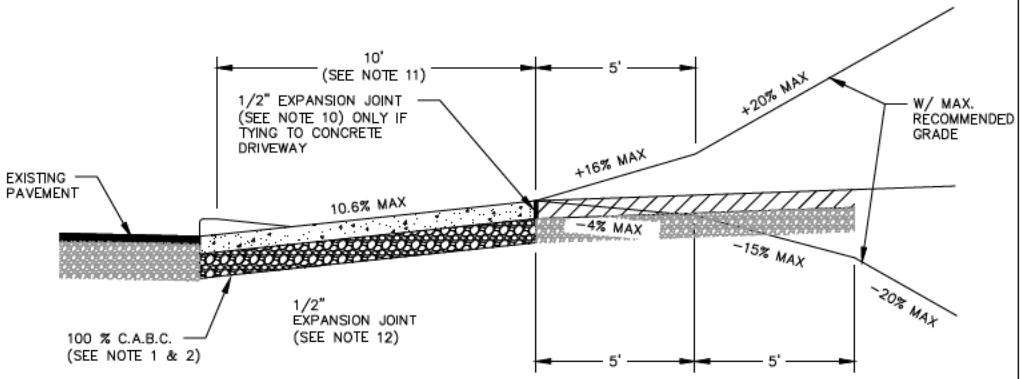

SECTION AA
NOT TO SCALE

NOTES:

1. RESIDENTIAL AND COMMERCIAL DRIVEWAYS – 6" OF 100% CABC WITH 6" CONCRETE FOR FULL LENGTH & DEPTH OF DRIVEWAY APRON.
2. MAXIMUM DRIVEWAY APRON SLOPE BEGINING AT CURB TO BE 10.6% UNLESS OTHERWISE APPROVED BY INSPECTOR.
3. RADII SHALL NOT ENCROACH ONTO ADJACENT PROPERTIES.
4. SIDEWALK SECTION SHALL NOT BE REQUIRED ALONG STREETS WHICH ARE NOT PLANNED FOR SIDEWALK.
5. DRIVEWAY APRON MUST EXTEND A MINIMUM OF 10 FT FROM BACK OF CURB.
6. RESIDENTIAL DRIVEWAYS TO BE 12 FT TO 18 FT IN WIDTH.
7. COMMERCIAL ACCESS APRON (ONE–WAY) DRIVEWAYS TO BE 14 FT TO 20 FT IN WIDTH.
8. COMMERCIAL ACCESS APRON (TWO–WAY) DRIVEWAYS TO BE 24 FT TO 36 FT IN WIDTH.
9. ALL CONCRETE SHALL BE A MINIMUM OF 4000 P.S.I.
10. INCH EXPANSION JOINTS TO BE FILLED WITH JOINT FILLER AND SEALER PLACED BETWEEN ALL RIGID OBJECTS AS SHOWN EXTENDING TO THE FULL DEPTH OF THE CONCRETE WITH THE TOP OF THE FILLER ½ INCH BELOW THE FINISHED SURFACE. JOINT FILLER MATERIALS SHALL BE IN ACCORDANCE WITH THE "JOINT MATERIALS" SECTION OF THE MOST CURRENT NCDOT STANDARD SPECIFICATIONS FOR ROAD STRUCTURES MANUAL.
11. IF CITY OR CONTRACTED STAFF IS CONSTRUCTING THE DRIVEWAY ACCESS APRON, CONSTRUCTION WILL NOT EXTEND OUTSIDE THE LIMITS OF THE EXISTING ROAD RIGHT–OF–WAY, UNLESS APPROPRIATE EASEMENT OR RIGHT OF ENTRY IS GIVEN TO THE CITY BY PROPERTY OWNER.

City of Asheville, NC
Standard Specifications and Details Manual

STANDARD DRIVEWAY ACCESS APRON WITH STAND UP CURB & WITHOUT SIDEWALK

REVISIONS

DATE	DESCRIPTION
6/9/15	ADDED NOTE 11
6/9/15	REVISED APRON CURB NG

STD. NO.
3.15D

NOTES:

1. TRANSVERSE EXPANSION JOINTS TO BE SPACED AT A MAXIMUM OF 50 FEET. WHEN SIDEWALK ABUTS CURB (WITHOUT UTILITY STRIP), EXPANSION JOINT SHALL BE PLACE BETWEEN BACK OF CURB AND SIDEWALK FOR THE LENGTH OF THE SIDEWALK.
2. ALL CONCRETE TO BE FINISHED WITH CURING COMPOUND.
3. TRANSVERSE EXPANSION JOINT MATERIALS SHALL BE IN ACCORDANCE WITH THE "JOINT MATERIALS" SECTION OF THE MOST CURRENT NCDOT STANDARD SPECIFICATIONS FOR ROAD STRUCTURES MANUAL.
4. TOOL JOINTS SHALL BE SPACED TO MATCH THE WIDTH OF THE SIDEWALK BUT BE NO LESS THAN FIVE (5) FEET APART OR NO LESS THAN SIX (6) FEET FOR SIDEWALK WITHOUT UTILITY STRIP. TOOL JOINTS SHALL BE 3/4 INCH DEEP AND MUST NOT BE SEALED. FOR NEW CURB AND GUTTER CONSTRUCTED WITH THE SIDEWALK, CURB AND GUTTER TOOL JOINT SHALL BE PLACED AS SPACED AND INLINE WITH SIDEWALK TOOL JOINT.
5. THE DOWN DIRECTION OF THE 2% (MAX.) CROSS SLOPE OF THE PROPOSED SIDEWALK IS TYPICAL AS SHOWN FOR DRAINAGE TOWARD ROADWAY. ACTUAL DOWN DIRECTION TO BE DETERMINED BY PROJECT'S EXISTING AND/OR PROPOSED TOPOGRAPHY.

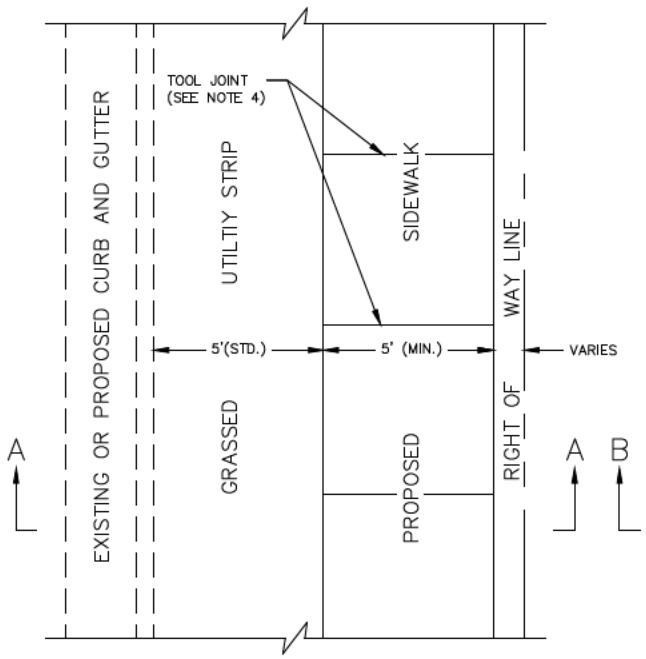

PLAN VIEW
WITH UTILITY STRIP

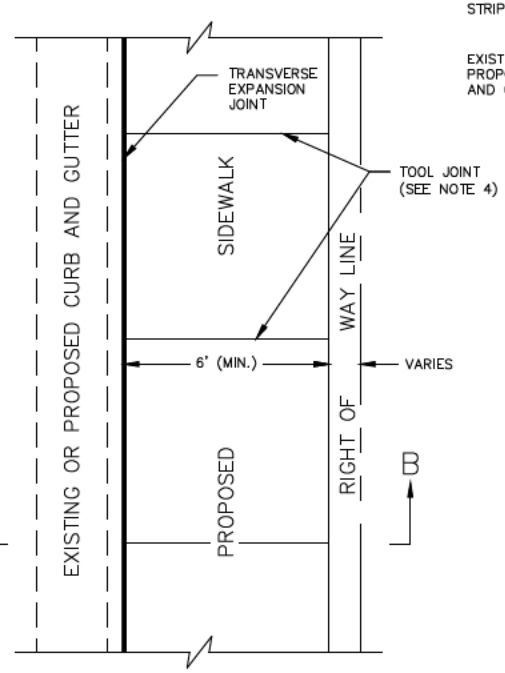

PLAN VIEW
WITHOUT UTILITY STRIP

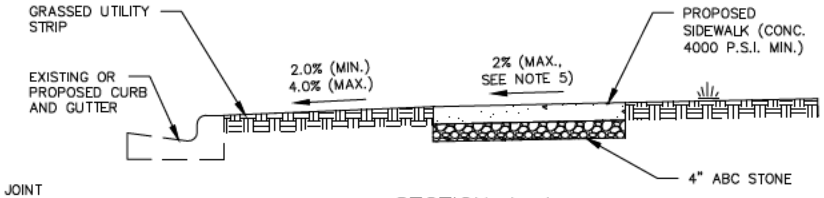

SECTION A–A

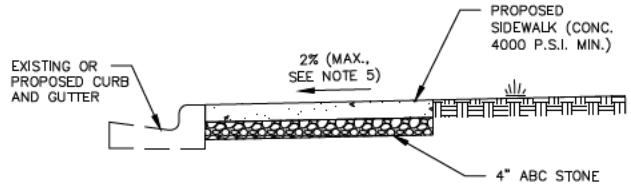

SECTION B–B

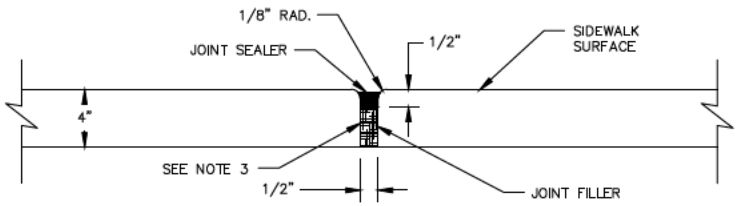

TRANSVERSE EXPANSION JOINT

City of Asheville, NC Standard Specifications and Details Manual	STANDARD CONCRETE SIDEWALK	REVISIONS		STD. NO.
		DATE	DESCRIPTION	3.16
		6/9/15	ADD. PLAN V EW W/O UTILITY STRIP	
		6/9/15	ADD. SECT. V EW W/O UTILITY STRIP	
		6/9/15	REVISED NOTES 1 AND 4	

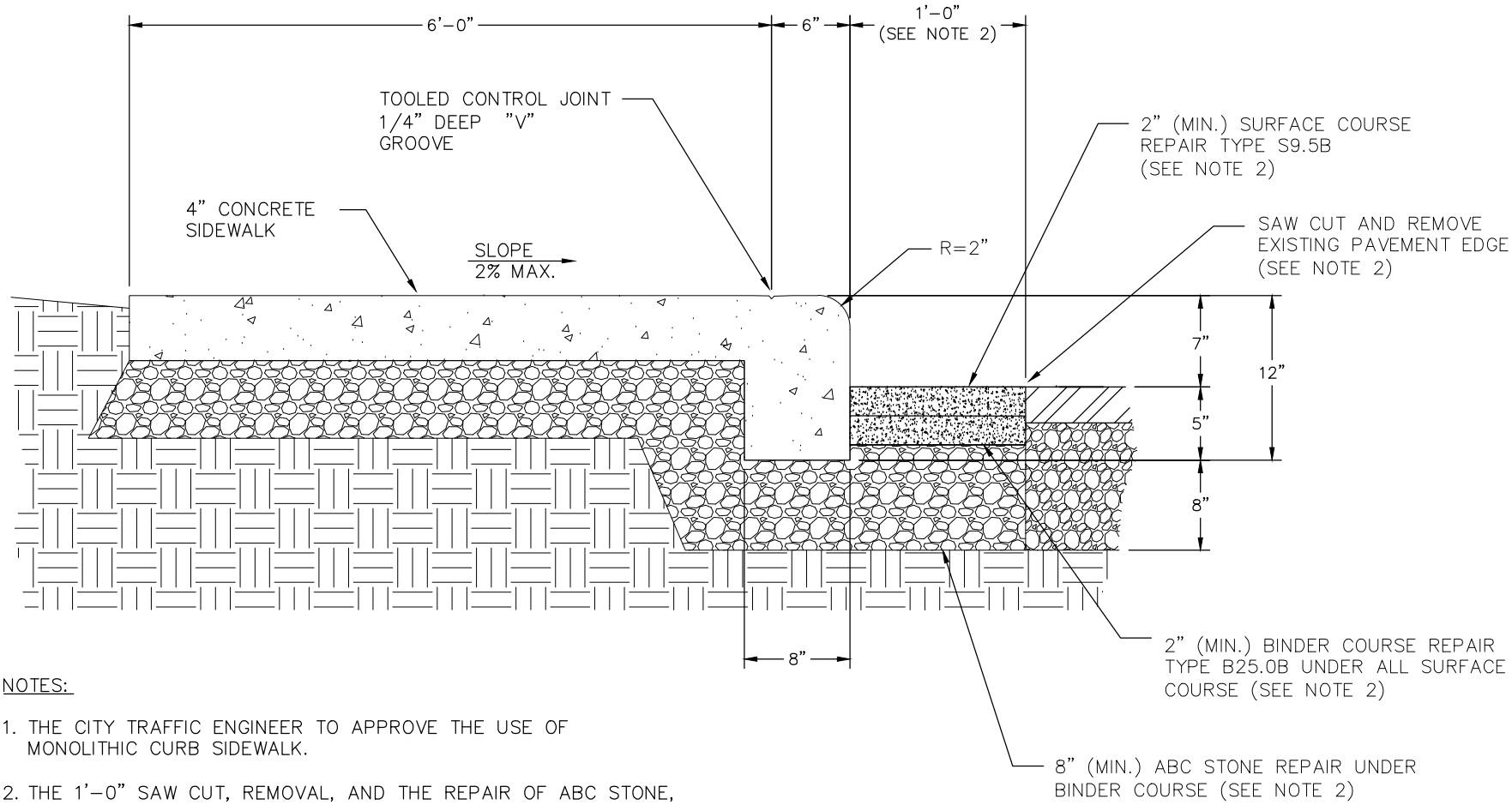

NOTES:

1. THE CITY TRAFFIC ENGINEER TO APPROVE THE USE OF MONOLITHIC CURB SIDEWALK.

2. THE 1'-0" SAW CUT, REMOVAL, AND THE REPAIR OF ABC STONE, BINDER, SURFACE COURSE FROM FACE OF CURB IS ONLY FOR THE INSTALLATION OF THE MONOLITHIC CURB & SIDEWALK ADJACENT TO AN EXISTING STREET.

City of Asheville, NC Standard Specifications and Details Manual	MONOLITHIC CURB & SIDEWALK	REVISIONS DATE / DESCRIPTION		STD. NO. 3.16A

NOTES:

1. TRANSVERSE EXPANSION JOINTS TO BE SPACED AT A MAXIMUM OF 50 FEET. WHEN SIDEWALK ABUTS CURB, EXPANSION JOINT SHALL BE PLACE BETWEEN BACK OF CURB AND SIDEWALK FOR THE LENGTH OF THE SIDEWALK.
2. ALL CONCRETE TO BE FINISHED WITH CURING COMPOUND.
3. TRANSVERSE EXPANSION JOINT MATERIALS SHALL BE IN ACCORDANCE WITH THE "JOINT MATERIALS" SECTION OF THE MOST CURRENT NCDOT STANDARD SPECIFICATIONS FOR ROAD STRUCTURES MANUAL.
4. TOOL JOINTS SHALL BE SPACED TO MATCH THE WIDTH OF THE SIDEWALK BUT BE NO LESS THAN SIX (6) FEET APART. TOOL JOINTS SHALL BE 3/4 INCH DEEP AND MUST NOT BE SEALED. FOR NEW CURB AND GUTTER CONSTRUCTED WITH THE SIDEWALK, CURB AND GUTTER TOOL JOINT SHALL BE PLACED AS SPACED AND INLINE WITH SIDEWALK TOOL JOINT.
5. THE DOWN DIRECTION OF THE 2% (MAX.) CROSS SLOPE OF THE PROPOSED SIDEWALK IS TYPICAL AS SHOWN FOR DRAINAGE TOWARD ROADWAY. ACTUAL DOWN DIRECTION TO BE DETERMINED BY PROJECT'S EXISTING AND/OR PROPOSED TOPOGRAPHY.

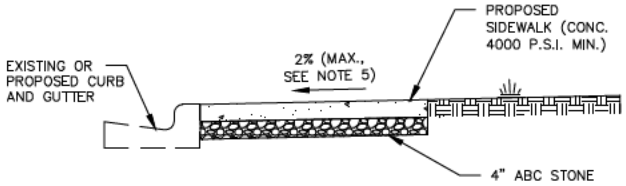

SECTION A–A

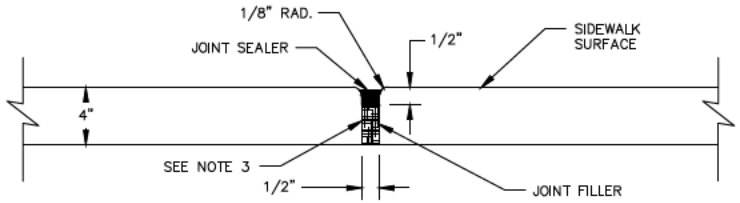

TRANSVERSE EXPANSION JOINT

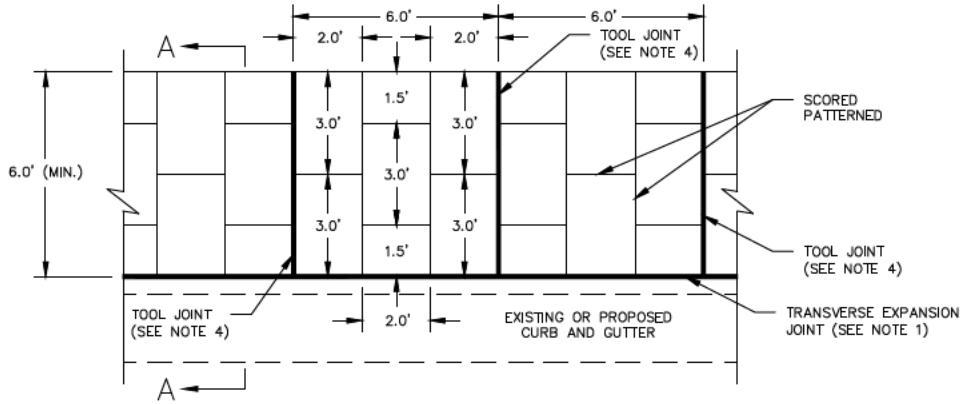

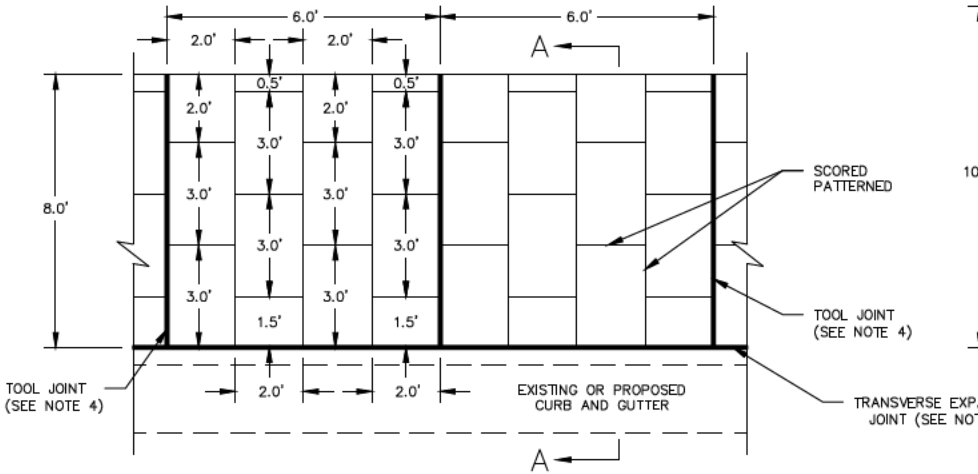

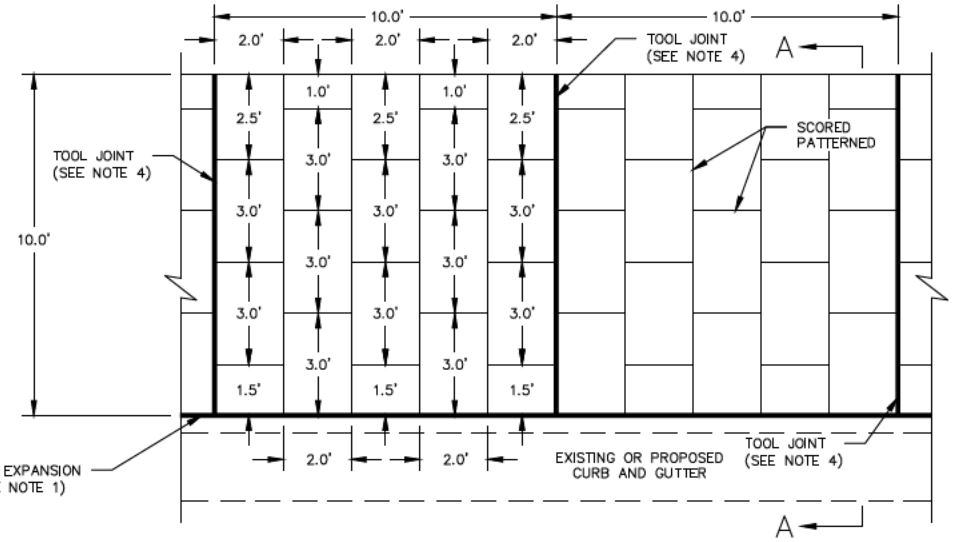

City of Asheville, NC

Standard Specifications and Details Manual

STANDARD CONCRETE SIDEWALK WITH RUNNING BOND PATTERN

REVISIONS	
DATE	DESCRIPTION

STD. NO.

3.16B

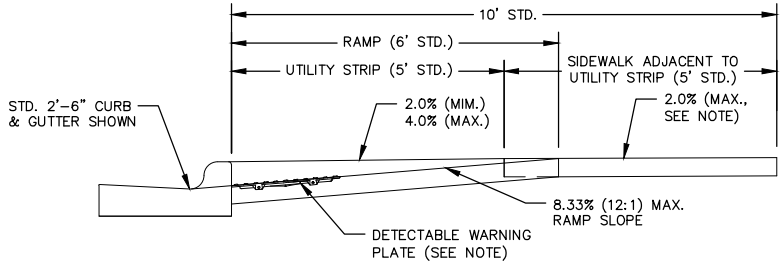

SECTION A–A

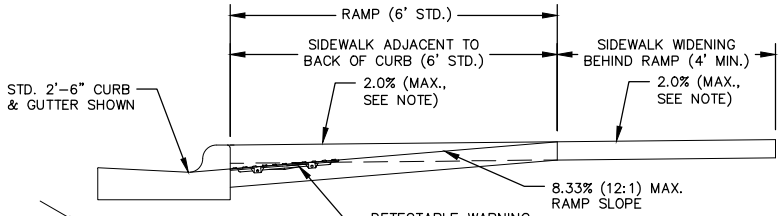

SECTION B–B

DETECTABLE WARNING PLATE:
USE NEENAH FOUNDRY COMPANY R-4984 DETECTABLE WARNING PLATE OR EQUAL AND MUST COMPLIES WITH ADAAG (AMERICANS WITH DISABILITIES ACT ACCESSIBILITY GUIDELINES) AND ARCHITECTURAL BARRIER ACT 1968 GUIDELINES.

EXPANSION JOINT:
½ INCH EXPANSION JOINTS TO BE FILLED WITH JOINT FILLER AND SEALER PLACED BETWEEN ALL RIGID OBJECTS AS SHOWN EXTENDING TO THE FULL DEPTH OF THE CONCRETE WITH THE TOP OF THE FILLER ½ INCH BELOW THE FINISHED SURFACE. JOINT FILLER MATERIALS SHALL BE IN ACCORDANCE WITH THE "JOINT MATERIALS" SECTION OF THE MOST CURRENT NCDOT STANDARD SPECIFICATIONS FOR ROAD STRUCTURES MANUAL.

2% (MAX.) SIDEWALK CROSS SLOPE:
THE DOWN DIRECTION OF THE 2% (MAX.) CROSS SLOPE OF THE PROPOSED SIDEWALK IS TYPICAL AS SHOWN FOR DRAINAGE TOWARD ROADWAY. ACTUAL DOWN DIRECTION TO BE DETERMINED BY PROJECT'S EXISTING AND/OR PROPOSED TOPOGRAPHY. EXISTING SIDEWALK TO REMAIN AS IS UNLESS THE INSTALLATION OF THE WHEELCHAIR RAMP REQUIRES ADJACENT SIDEWALK SECTIONS TO BE REPLACED.

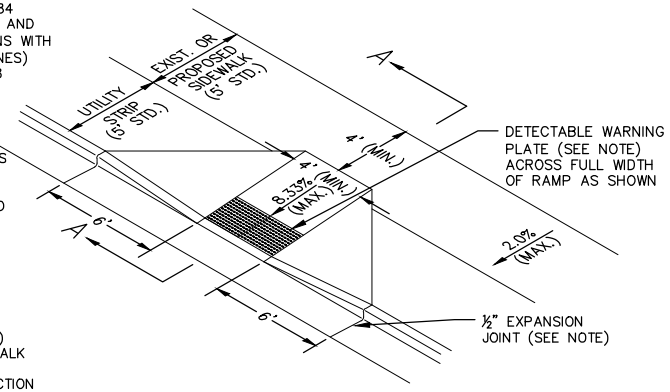

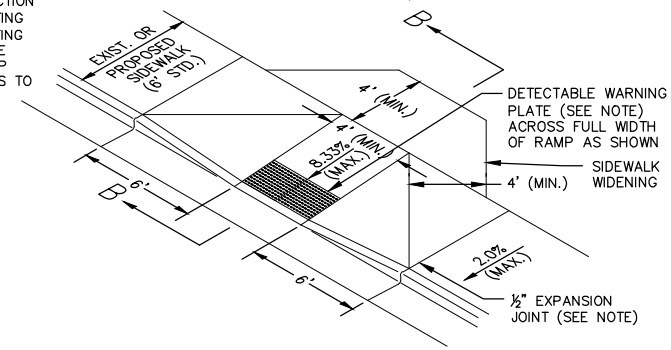

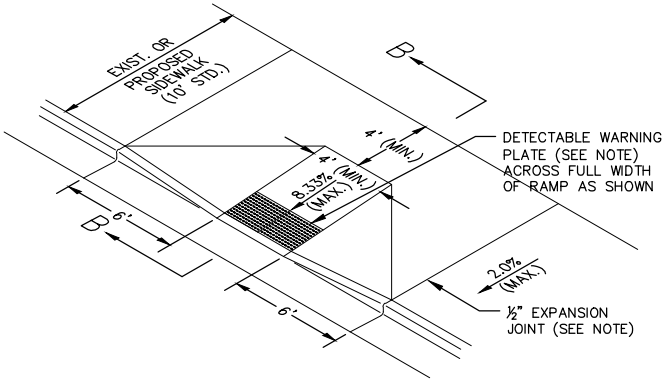

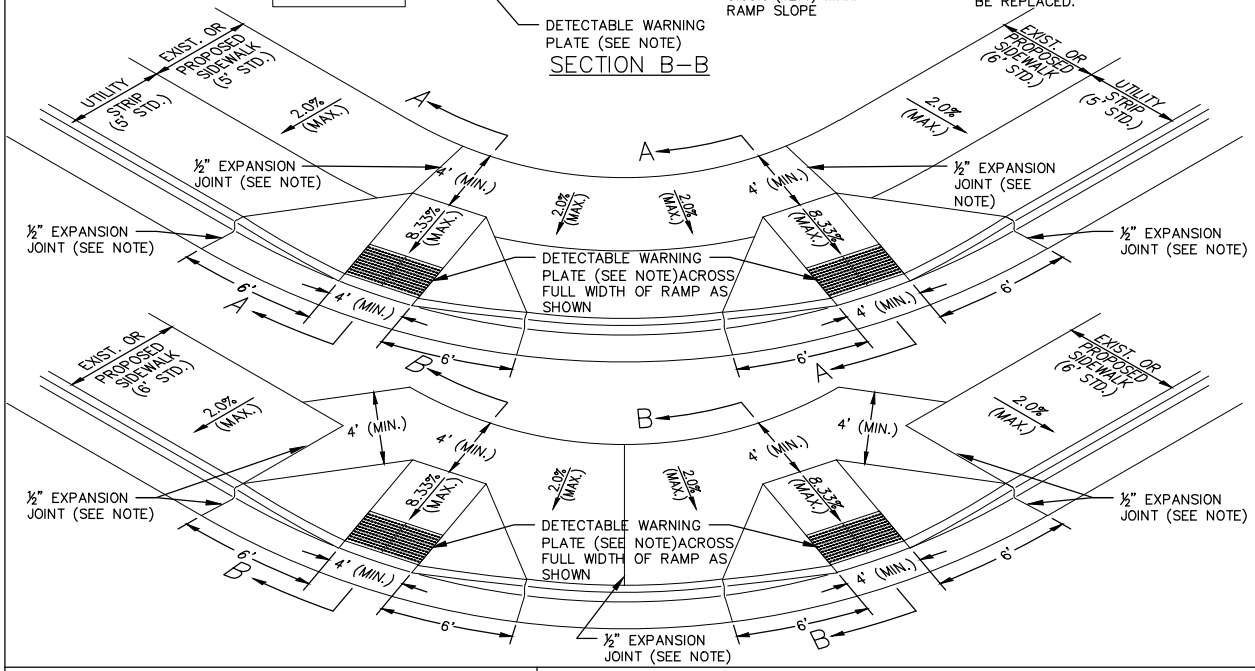

City of Asheville, NC Standard Specifications and Details Manual	STANDARD WHEELCHAIR RAMP	REVISIONS DATE / DESCRIPTION	STD. NO. 3.17

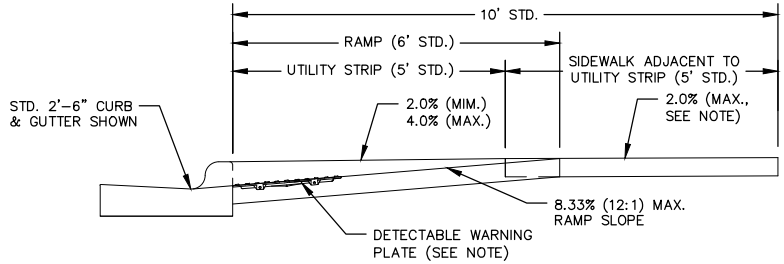

SECTION A–A

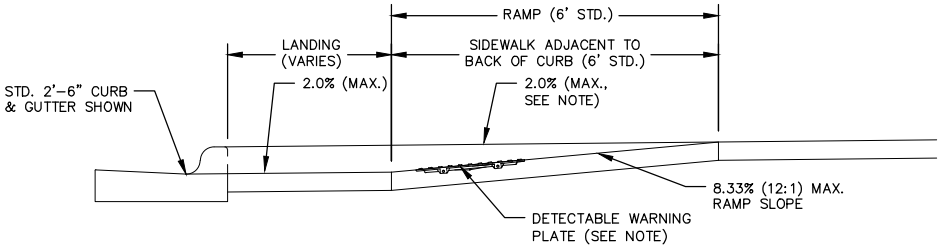

SECTION C–C

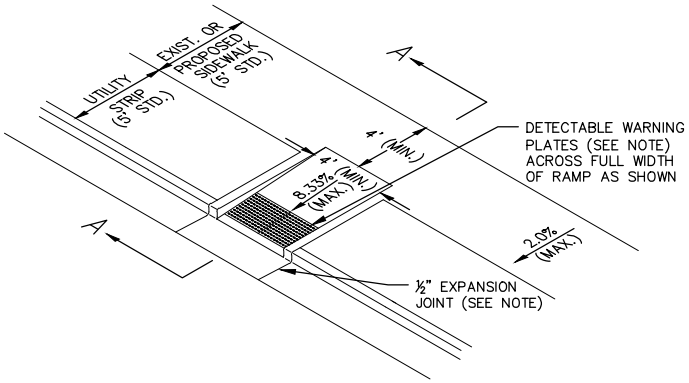

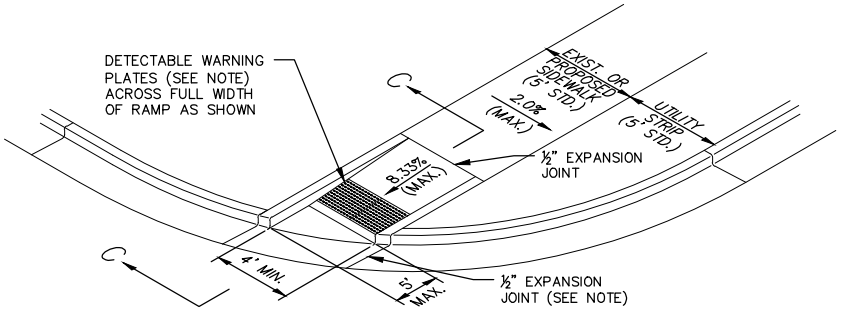

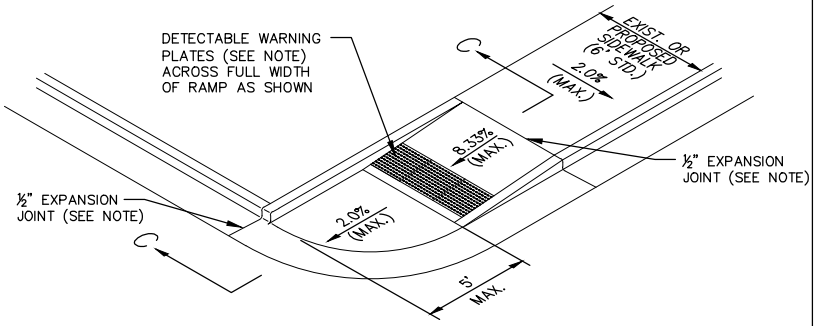

DETECTABLE WARNING PLATE:
USE NEENAH FOUNDRY COMPANY R–4984 DETECTABLE WARNING PLATE OR EQUAL AND MUST COMPLIES WITH ADAAG (AMERICANS WITH DISABILITIES ACT ACCESSIBILITY GUIDELINES) AND ARCHITECTURAL BARRIER ACT 1968 GUIDELINES.

EXPANSION JOINT:
½ INCH EXPANSION JOINTS TO BE FILLED WITH JOINT FILLER AND SEALER PLACED BETWEEN ALL RIGID OBJECTS AS SHOWN EXTENDING TO THE FULL DEPTH OF THE CONCRETE WITH THE TOP OF THE FILLER ½ INCH BELOW THE FINISHED SURFACE. JOINT FILLER MATERIALS SHALL BE IN ACCORDANCE WITH THE "JOINT MATERIALS" SECTION OF THE MOST CURRENT NCDOT STANDARD SPECIFICATIONS FOR ROAD STRUCTURES MANUAL.

2% (MAX.) SIDEWALK CROSS SLOPE:
THE DOWN DIRECTION OF THE 2% (MAX.) CROSS SLOPE OF THE PROPOSED SIDEWALK IS TYPICAL AS SHOWN FOR DRAINAGE TOWARD ROADWAY. ACTUAL DOWN DIRECTION TO BE DETERMINED BY PROJECT'S EXISTING AND/OR PROPOSED TOPOGRAPHY. EXISTING SIDEWALK TO REMAIN AS IS UNLESS THE INSTALLATION OF THE WHEELCHAIR RAMP REQUIRES ADJACENT SIDEWALK SECTIONS TO BE REPLACED.

City of Asheville, NC Standard Specifications and Details Manual	STANDARD WHEELCHAIR RAMP	REVISIONS DATE / DESCRIPTION	STD. NO. 3.17A

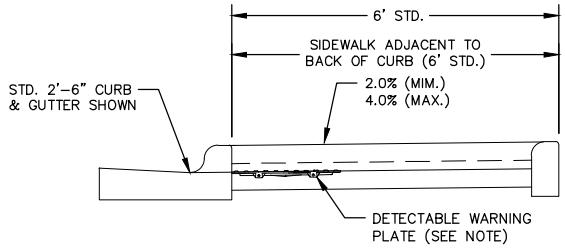

SECTION D-D

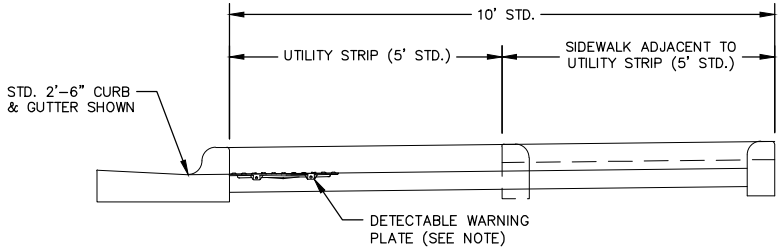

SECTION E-E

DETECTABLE WARNING PLATE:
USE NEENAH FOUNDRY COMPANY R-4984 DETECTABLE WARNING PLATE OR EQUAL AND MUST COMPLIES WITH ADAAG (AMERICANS WITH DISABILITIES ACT ACCESSIBILITY GUIDELINES) AND ARCHITECTURAL BARRIER ACT 1968 GUIDELINES.

EXPANSION JOINT:
½ INCH EXPANSION JOINTS TO BE FILLED WITH JOINT FILLER AND SEALER PLACED BETWEEN ALL RIGID OBJECTS AS SHOWN EXTENDING TO THE FULL DEPTH OF THE CONCRETE WITH THE TOP OF THE FILLER ½ INCH BELOW THE FINISHED SURFACE. JOINT FILLER MATERIALS SHALL BE ACCORDANCE WITH THE "JOINT MATERIALS" SECTION OF THE MOST CURRENT NCDOT STANDARD SPECIFICATIONS FOR ROAD STRUCTURES MANUAL.

2% (MAX.) SIDEWALK CROSS SLOPE:
THE DOWN DIRECTION OF THE 2% (MAX.) CROSS SLOPE OF THE PROPOSED SIDEWALK IS TYPICAL AS SHOWN FOR DRAINAGE TOWARD ROADWAY. ACTUAL DOWN DIRECTION TO BE DETERMINED BY PROJECT'S EXISTING AND/OR PROPOSED TOPOGRAPHY. EXISTING SIDEWALK TO REMAIN AS IS UNLESS THE INSTALLATION OF THE WHEELCHAIR RAMP REQUIRES ADJACENT SIDEWALK SECTIONS TO BE REPLACED.

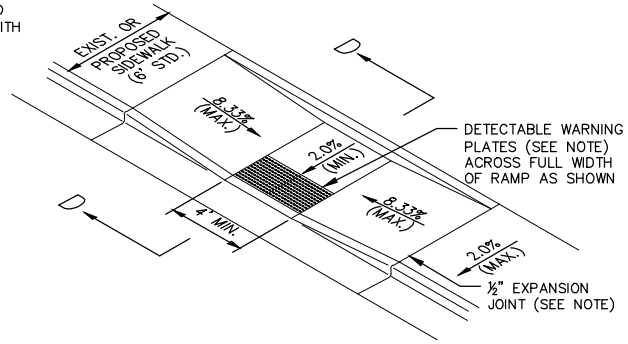

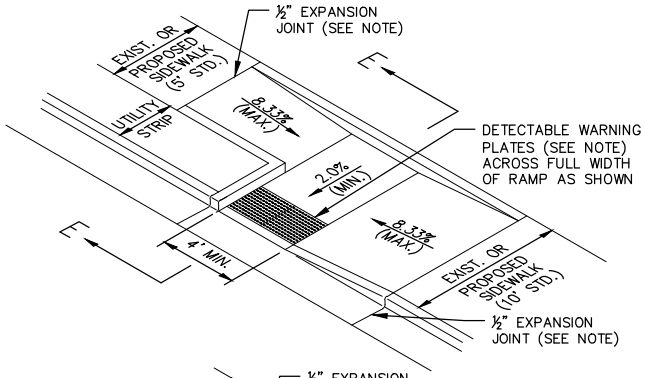

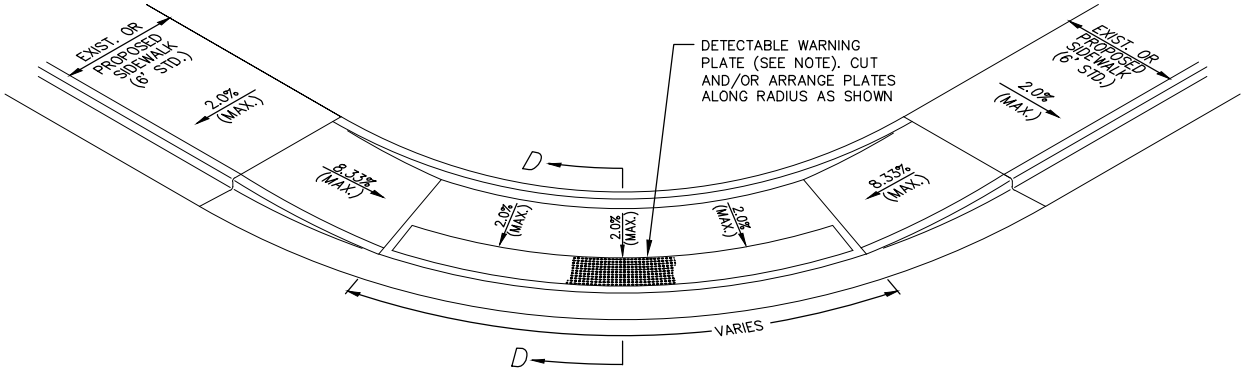

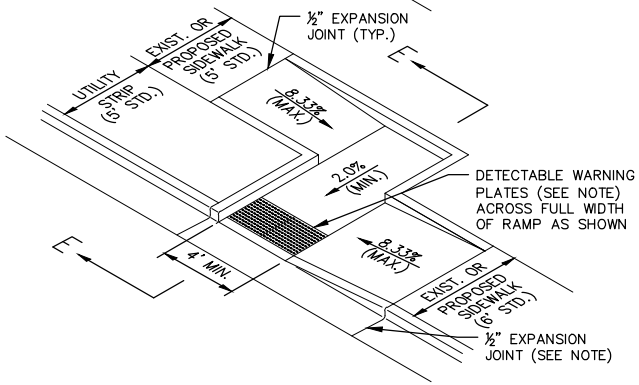

City of Asheville, NC Standard Specifications and Details Manual	STANDARD WHEELCHAIR RAMP	REVISIONS DATE / DESCRIPTION	STD. NO. 3.17B

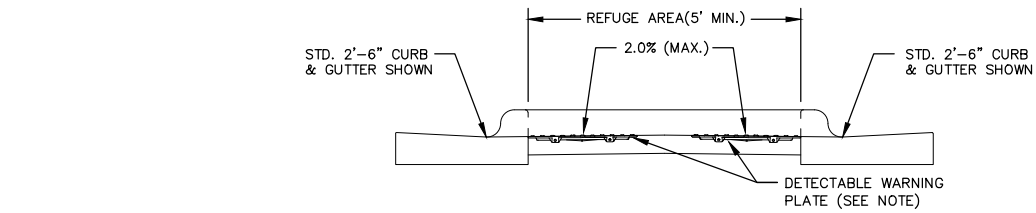

SECTION F-F

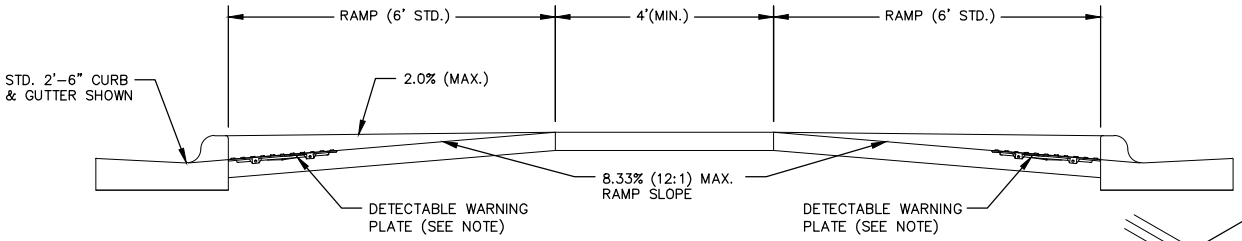

SECTION G-G

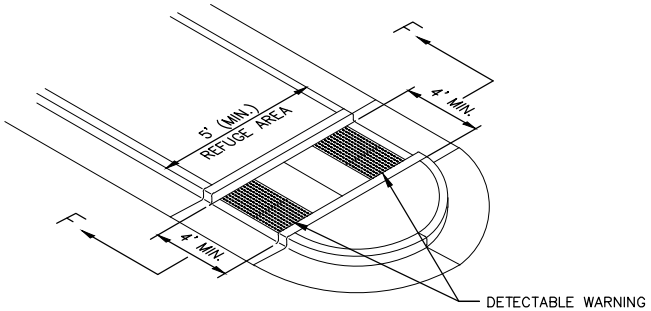

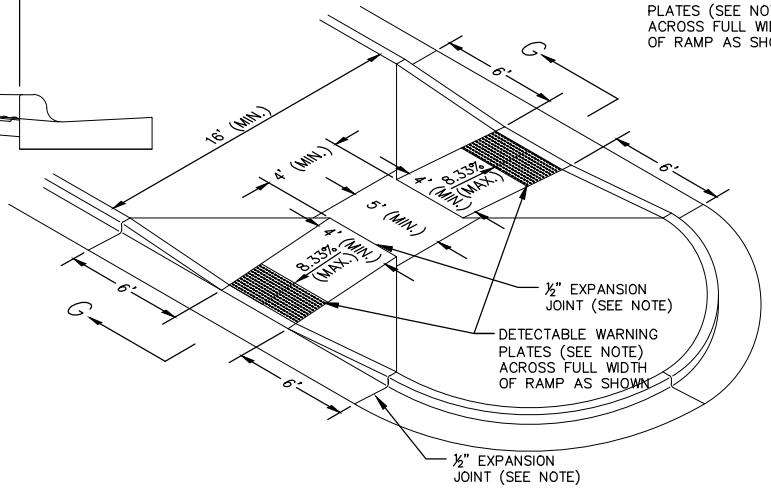

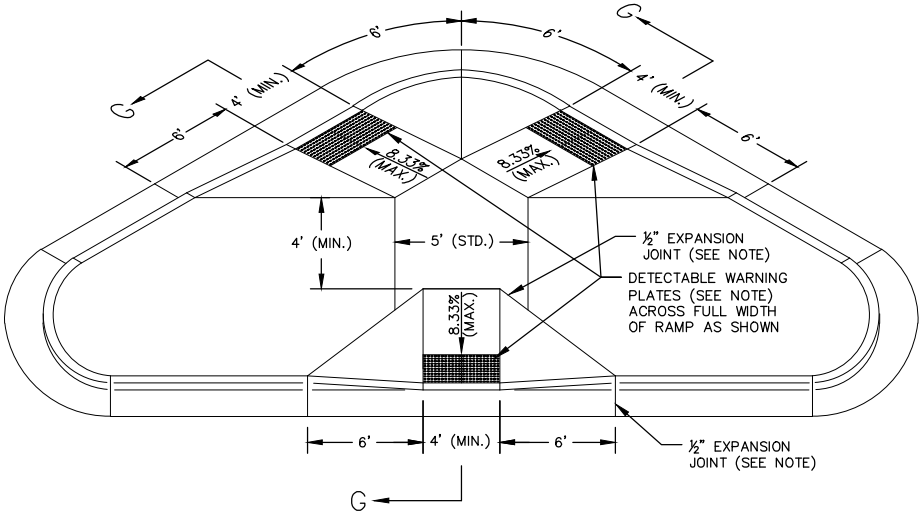

DETECTABLE WARNING PLATE:
USE NEENAH FOUNDRY COMPANY R-4984 DETECTABLE WARNING PLATE OR EQUAL AND MUST COMPLIES WITH ADAAG (AMERICANS WITH DISABILITIES ACT ACCESSIBILITY GUIDELINES) AND ARCHITECTURAL BARRIER ACT 1968 GUIDELINES.

EXPANSION JOINT:
½ INCH EXPANSION JOINTS TO BE FILLED WITH JOINT FILLER AND SEALER PLACED BETWEEN ALL RIGID OBJECTS AS SHOWN EXTENDING TO THE FULL DEPTH OF THE CONCRETE WITH THE TOP OF THE FILLER ½ INCH BELOW THE FINISHED SURFACE. JOINT FILLER MATERIALS SHALL BE ACCORDANCE WITH THE "JOINT MATERIALS" SECTION OF THE MOST CURRENT NCDOT STANDARD SPECIFICATIONS FOR ROAD STRUCTURES MANUAL.

2% (MAX.) SIDEWALK CROSS SLOPE:
THE DOWN DIRECTION OF THE 2% (MAX.) CROSS SLOPE OF THE PROPOSED SIDEWALK IS TYPICAL AS SHOWN FOR DRAINAGE TOWARD ROADWAY. ACTUAL DOWN DIRECTION TO BE DETERMINED BY PROJECT'S EXISTING AND/OR PROPOSED TOPOGRAPHY. EXISTING SIDEWALK TO REMAIN AS IS UNLESS THE INSTALLATION OF THE WHEELCHAIR RAMP REQUIRES ADJACENT SIDEWALK SECTIONS TO BE REPLACED.

City of Asheville, NC Standard Specifications and Details Manual	STANDARD WHEELCHAIR RAMP	REVISIONS DATE / DESCRIPTION	STD. NO. 3.17C

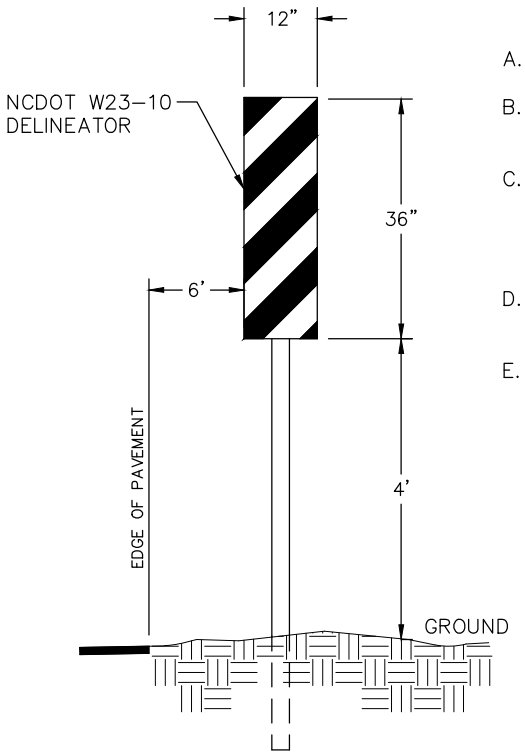

DETAIL

A. BOTTOM EDGE OF DELINEATOR 4' ABOVE ROADWAY.

B. THE DELINEATOR STRIPES SHALL SLOPE UPWARD AND OUTWARD FROM TRAFFIC.

C. DELINEATORS TO BE SPACED ON CENTERS AT 1/3 OF THE DISTANCE D SHOWN BELOW FOR NEW ASPHALT WIDTHS < 15_FT. OR AT 1/4 OF D FOR NEW ASPHALT WIDTHS > 15 FT.

D. DELINEATORS SHALL BE MOUNTED ON BREAKAWAY POSTS.

E. DELINEATORS SHALL BE REFLECTORIZED.

NOTES:

1. TAPER ON BOTH ENDS OF ROADWAY WIDENING SHALL BE A MININMUM 2:1. THE CITY OF ASHEVILLE AND/OR NCDOT RESERVE THE RIGHT TO REQUIRE A LONGER TAPER IF DEEMED NECESSARY FOR THE SAFETY OF THE PUBLIC.

2. A SOLID WHITE EDGE MARKING SHALL BE EXTENDED ALONG WIDENING AT EXISTING PAVEMENT.

3. DELINEATORS SHALL ONLY BE REQUIRED AT TAPER FROM CURB TO EXISTING PAVEMENT IN DIRECTION OF TRAVEL.

4. DELINEATORS SHALL BE ORIENTED SUCH THAT THE FACE OF THE SIGN IS PERPENDICULAR TO TRAVEL LANE.

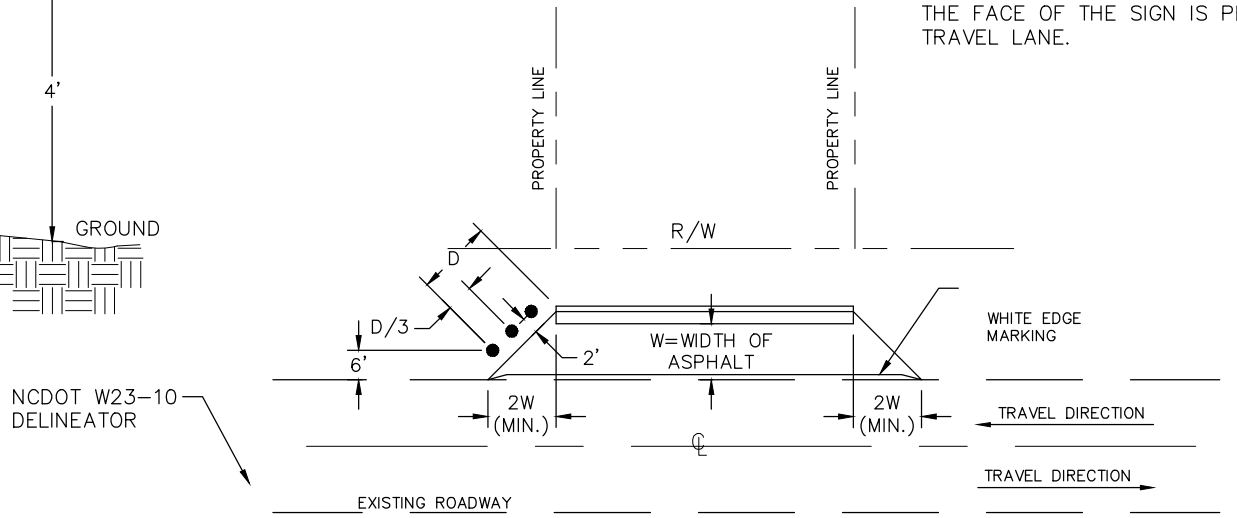

PLAN VIEW

City of Asheville, NC Standard Specifications and Details Manual	STANDARD PAVEMENT WIDENING TAPER AND MARKINGS	REVISIONS DATE / DESCRIPTION	STD. NO. 3.18

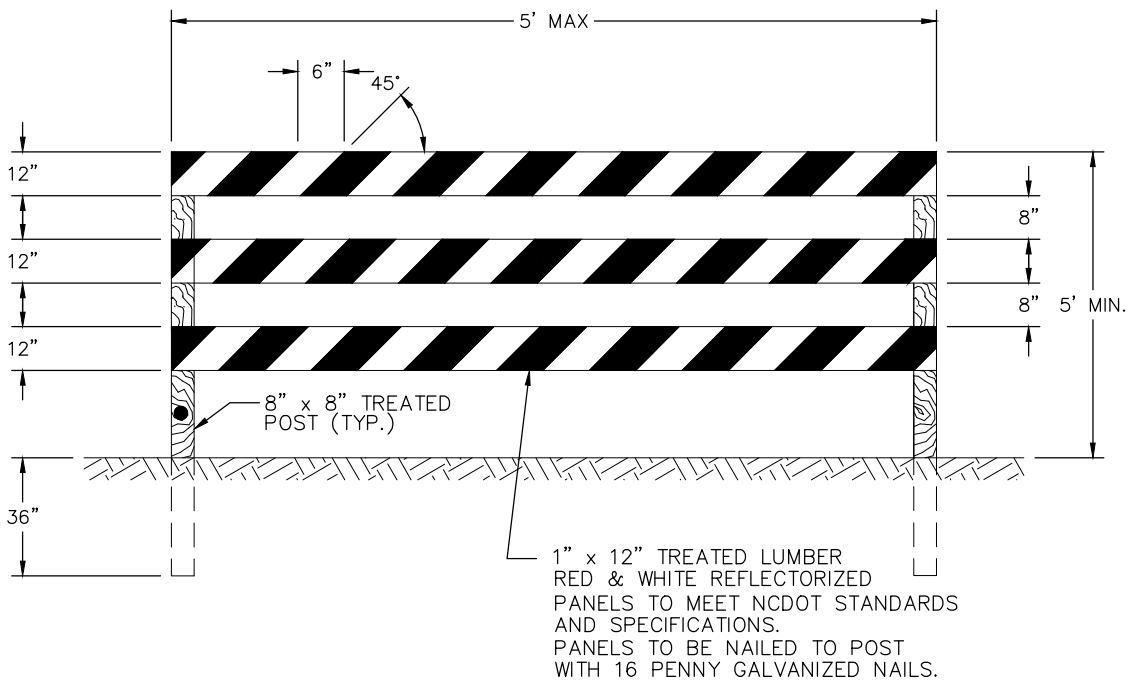

NOTES:

1. BARRICADE TO BE ERECTED ACROSS ENTIRE ROADWAY INCLUDING CURB & GUTTER.
2. ADVANCE WARNING SIGN W14–1 (DEAD END) SHALL BE PLACED JUST AFTER LAST INTERSECTING STREET.

City of Asheville, NC Standard Specifications and Details Manual	TEMPORARY BARRICADE FOR DEAD END ROADS	REVISIONS DATE / DESCRIPTION	STD. NO. 3.19

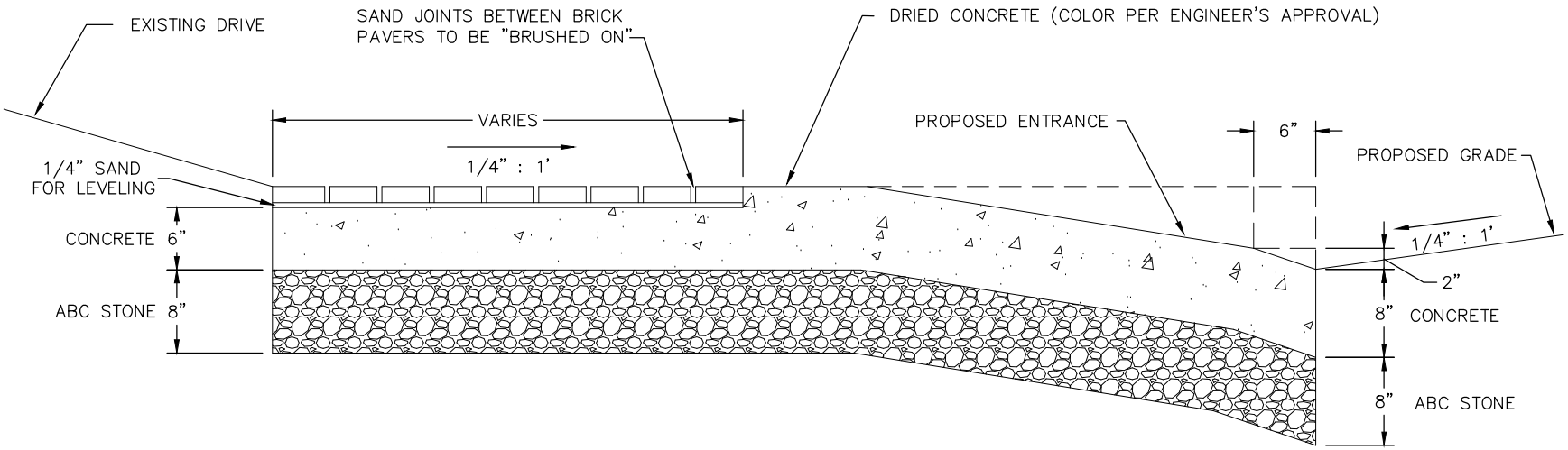

NOT TO SCALE

City of Asheville, NC Standard Specifications and Details Manual	BRICK SIDEWALK AT DRIVEWAY ENTRANCES	REVISIONS DATE / DESCRIPTION	STD. NO. 3.20

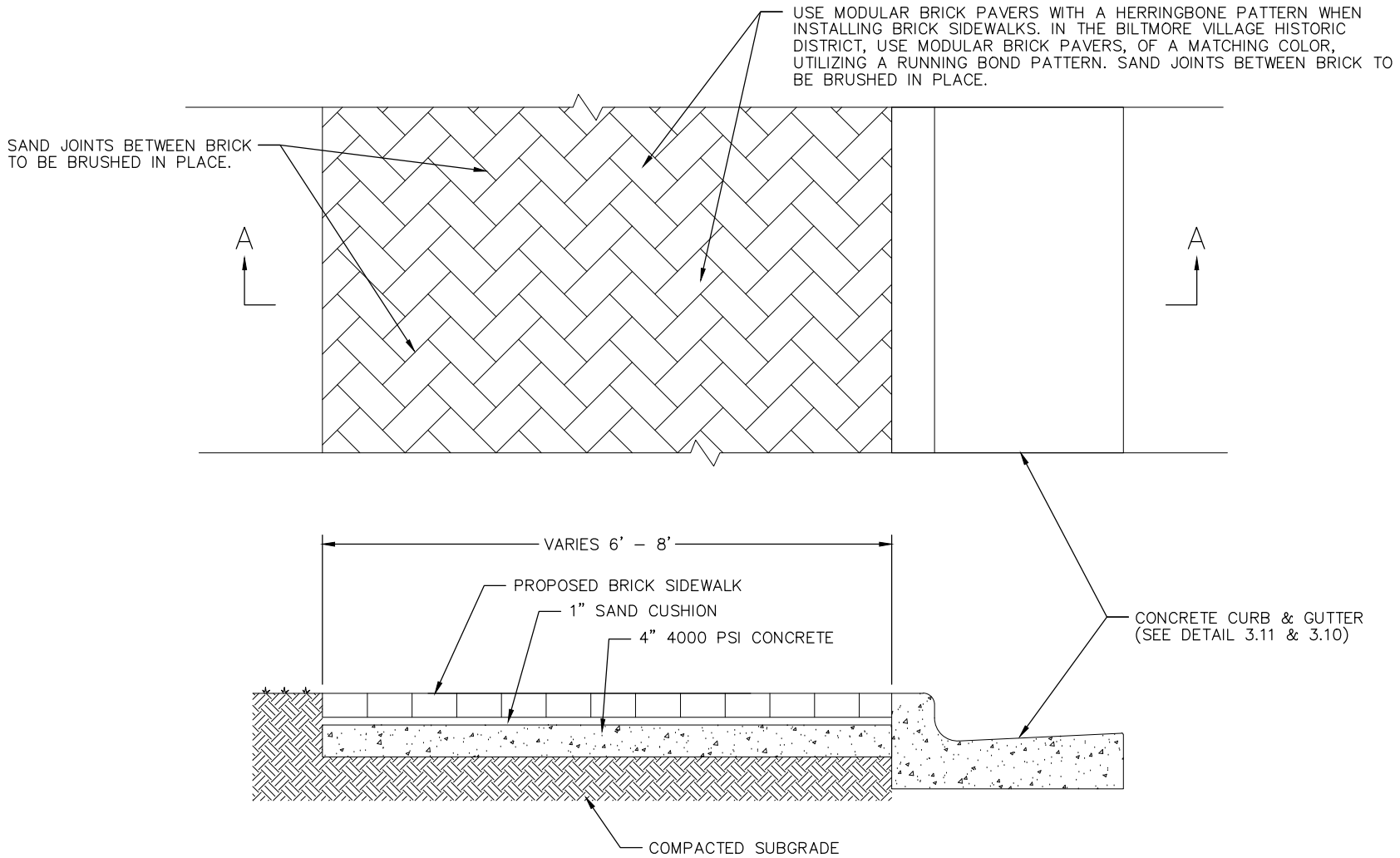

SECTION AA

City of Asheville, NC Standard Specifications and Details Manual	NEW BRICK SIDEWALK	REVISIONS DATE / DESCRIPTION	STD. NO. 3.21

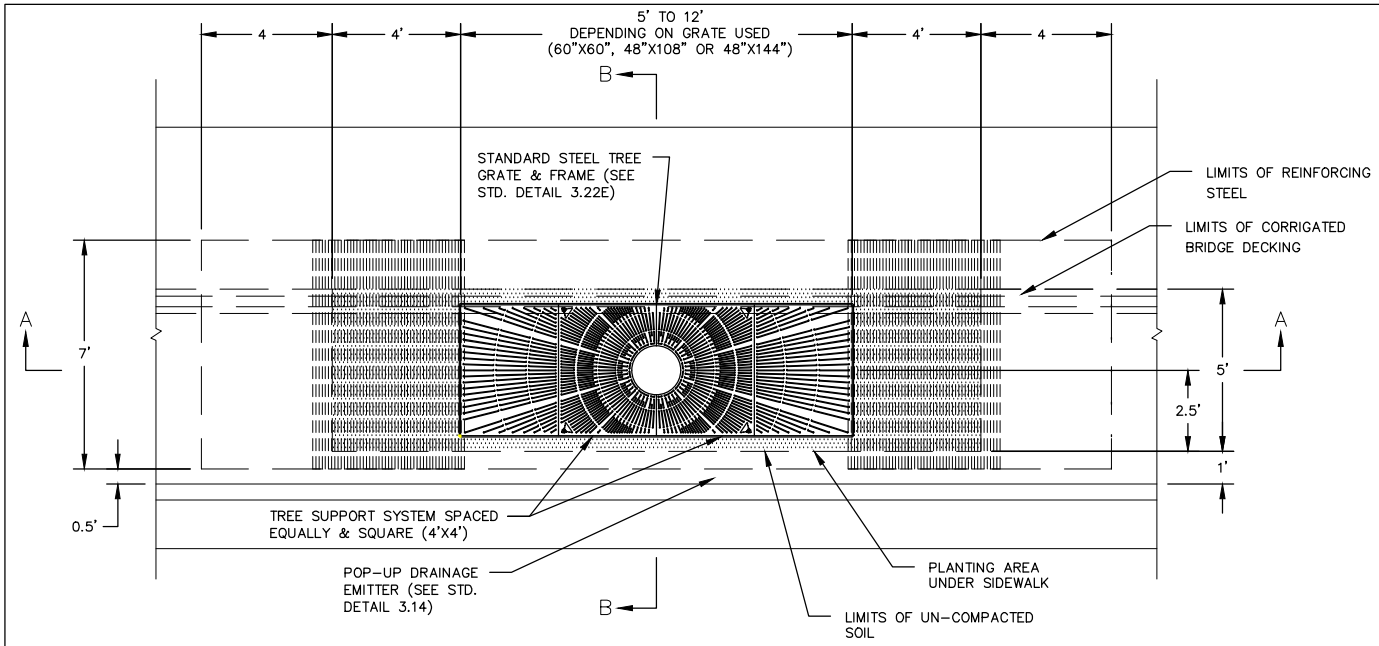

NOTES:
TO REPAIR A CUT IN THIS AREA, SAW CUT A VERTICAL STRAIGHT CUT AND REMOVE CONCRETE STEEL. DRILL IN TO VERTICAL CONCRETE FACE AND DOWEL STEEL INTO EXISTING SIDEWALK SIX INCHES AND SECURE WITH APPROVED EPOXY. SPLICE STEEL IN NEW CUT A MINIMUM OF FOUR INCHES AND REPLACE REMAINING STEEL AS SHOWN.

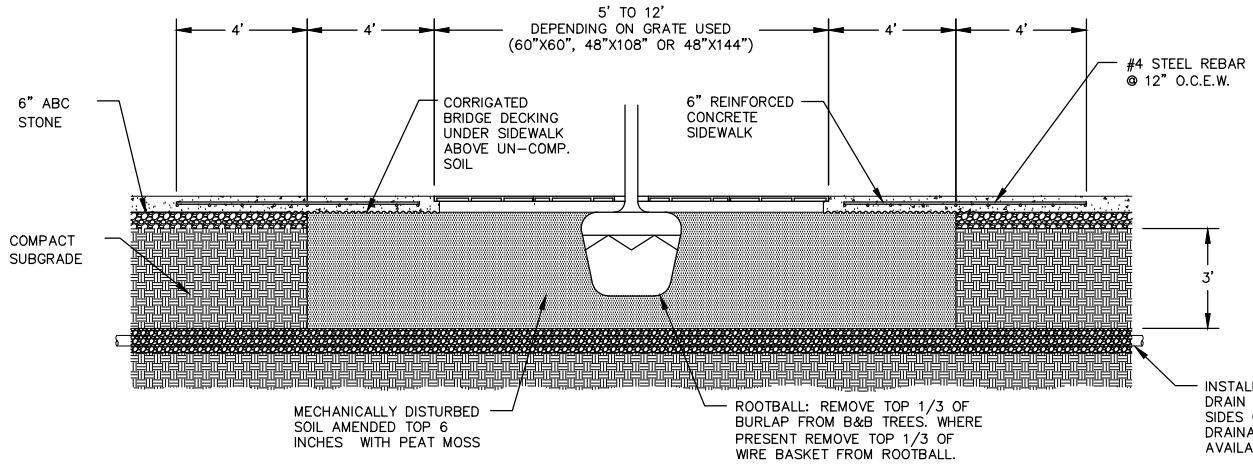

SECTION A–A

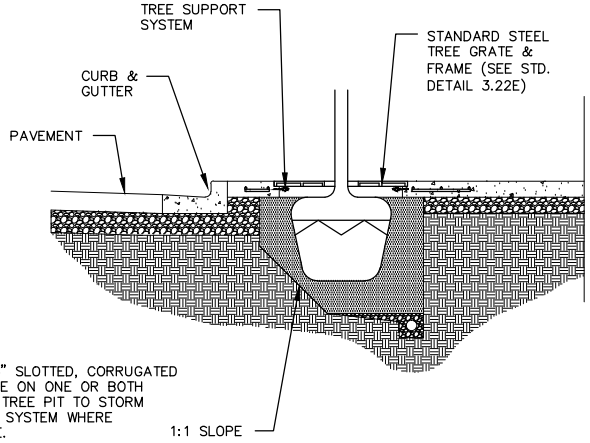

SECTION B–B

City of Asheville, NC

Standard Specifications and Details Manual

SIDEWALK TREE PIT, REINFORCED CONCRETE SIDEWALK

REVISIONS	
DATE	DESCRIPTION

STD. NO.

3.22

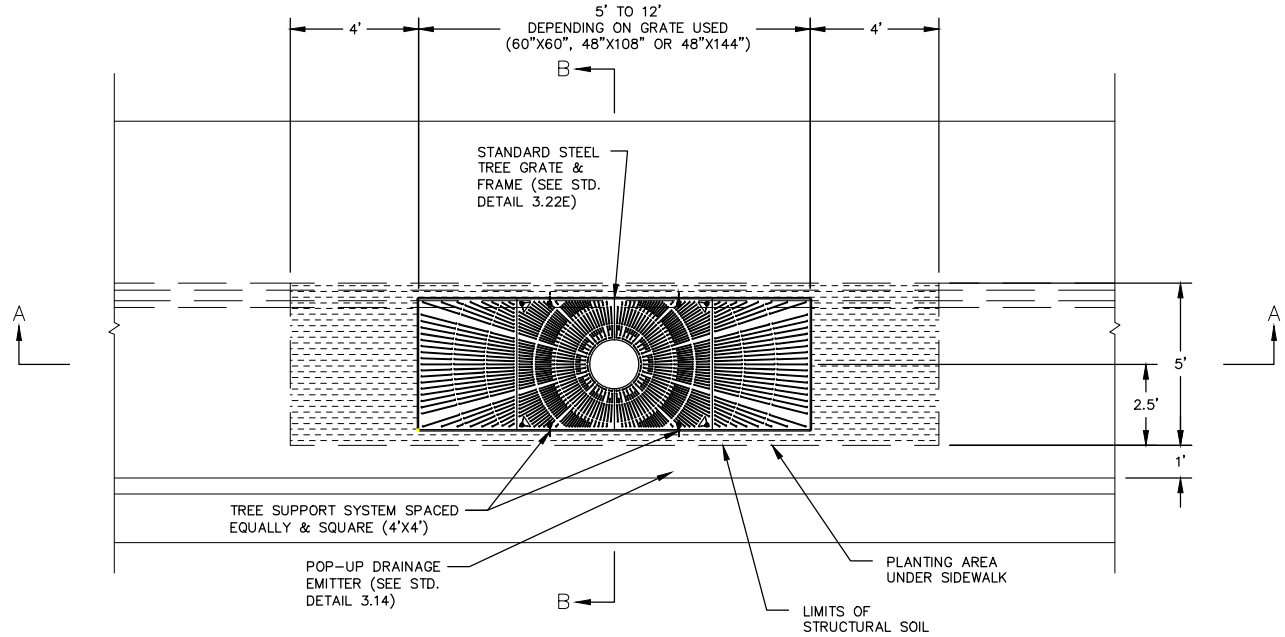

SECTION A–A

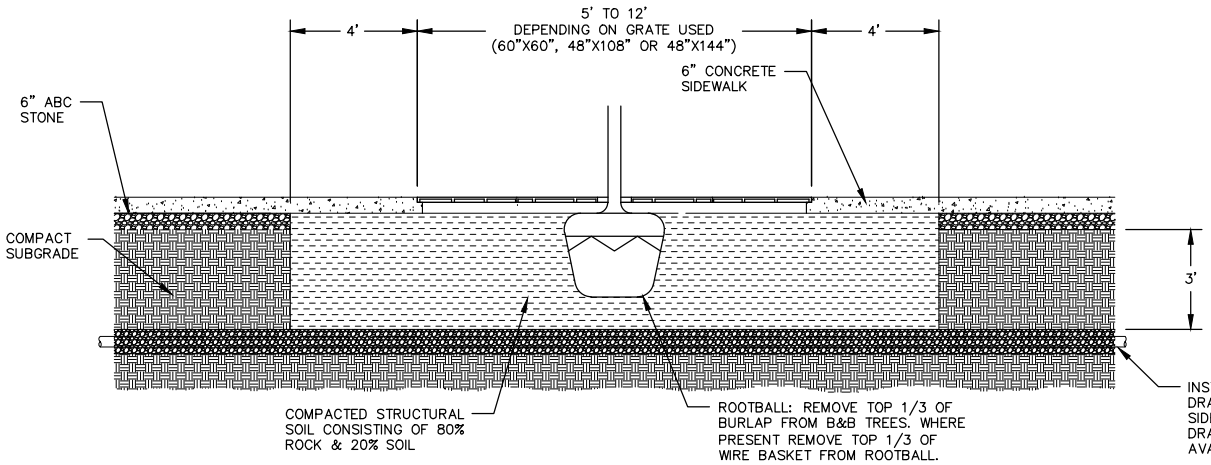

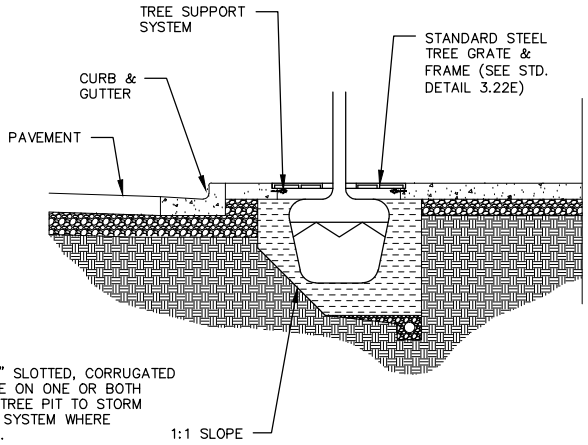

SECTION B–B

City of Asheville, NC

Standard Specifications and Details Manual

SIDEWALK TREE PIT, STRUCTURAL SOIL

REVISIONS	
DATE	DESCRIPTION

STD. NO.

3.22A

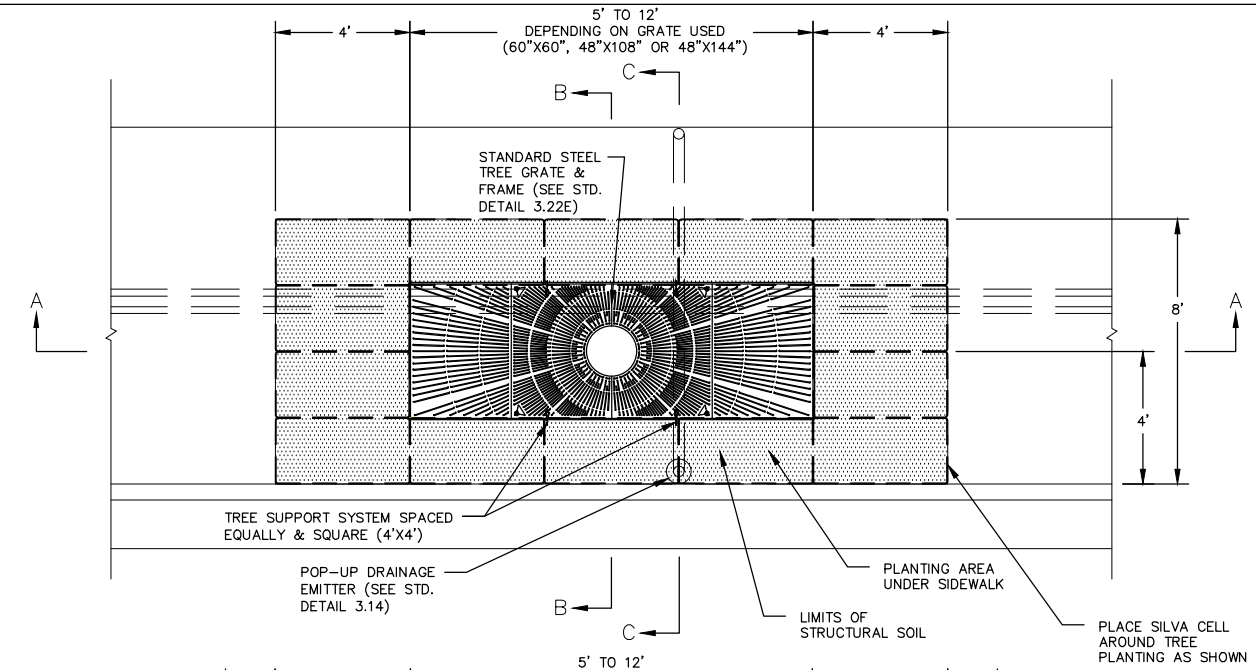

SILVA CELL FRAME & DECK:
USE DEEPROOT SILVA CELL MODULAR SUSPENDED PAVEMENT FRAME & DECK OR EQUAL

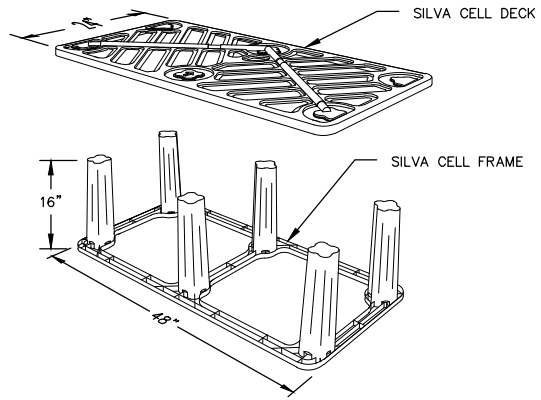

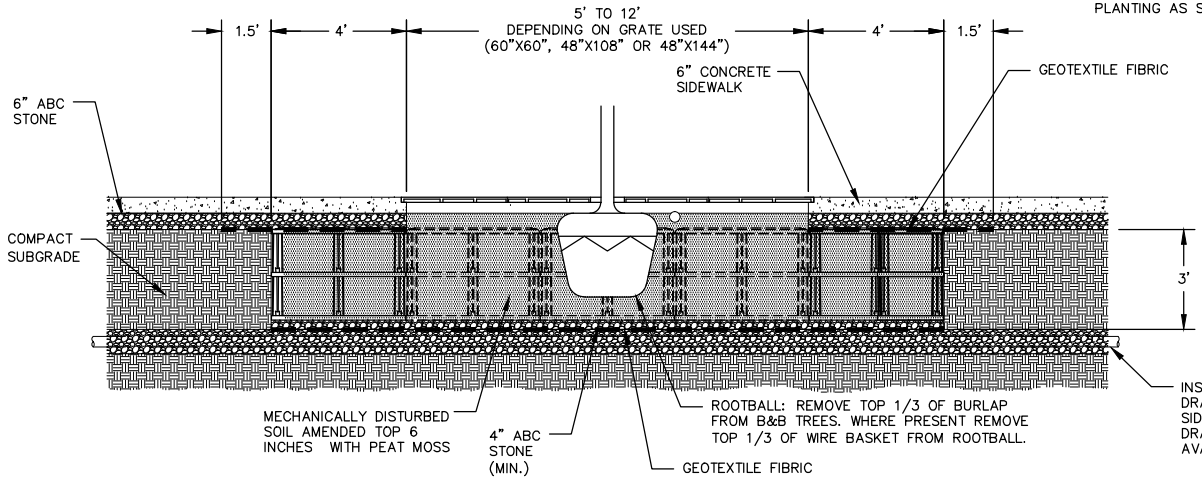

SECTION A–A

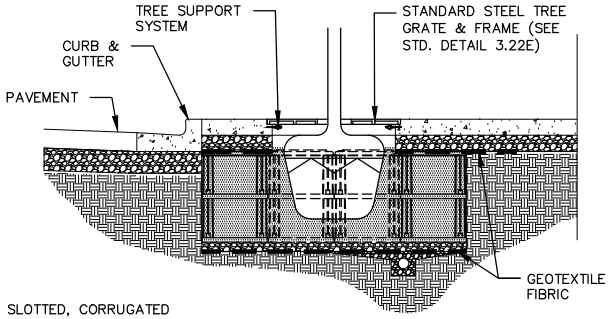

SECTION B–B

City of Asheville, NC

Standard Specifications and Details Manual

SIDEWALK TREE PIT, SILVA CELL

REVISIONS	
DATE	DESCRIPTION

STD. NO.

3.22B

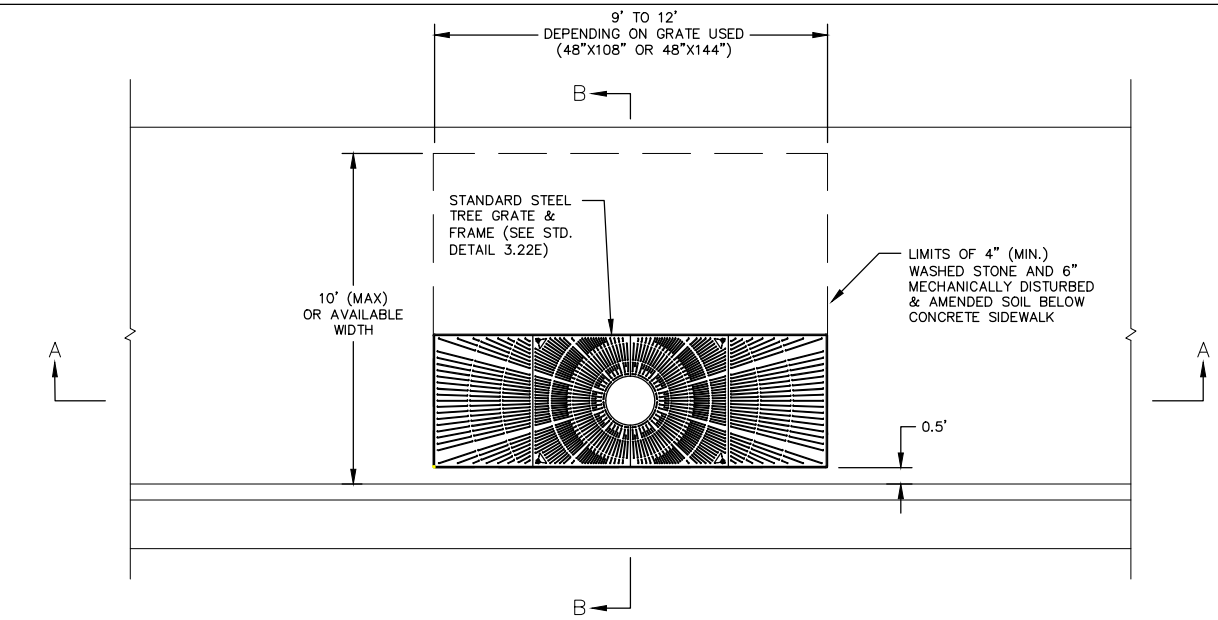

NOTE:
WASHED STONE LAYERS PROMOTES DEEPER ROOTING TO DELAY CONCRETE DAMAGE

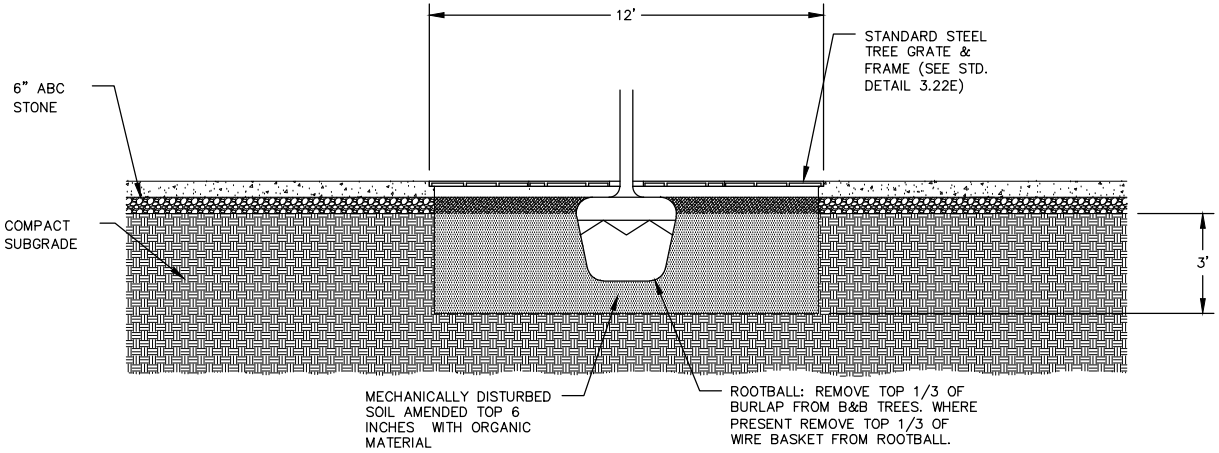

SECTION A–A

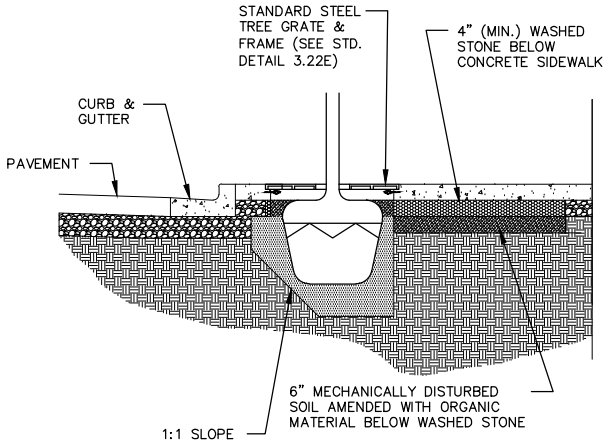

SECTION B–B

City of Asheville, NC Standard Specifications and Details Manual	SIDEWALK TREE PIT, LARGE TREE GRATE WITH WASHED STONE BORDER	REVISIONS DATE / DESCRIPTION	STD. NO. 3.22C

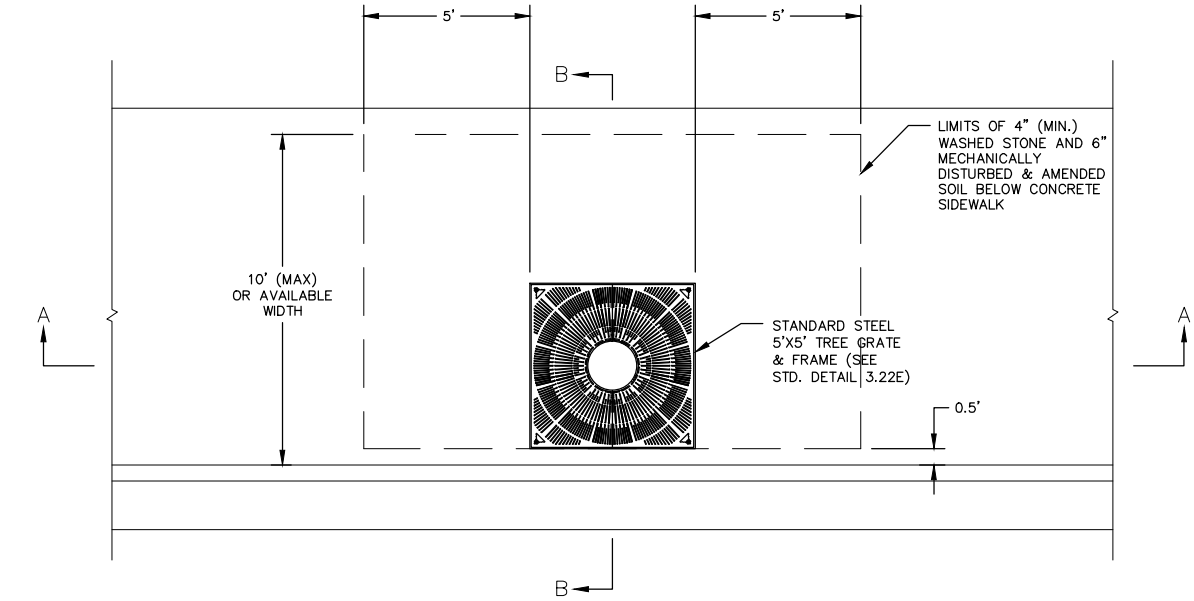

NOTE:
WASHED STONE LAYERS PROMOTES DEEPER ROOTING TO DELAY CONCRETE DAMAGE

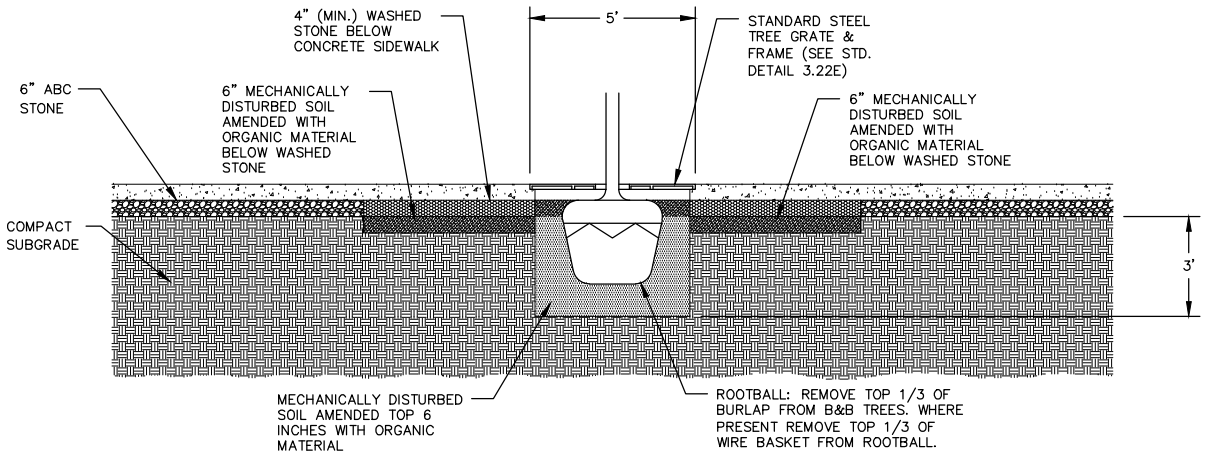

SECTION A–A

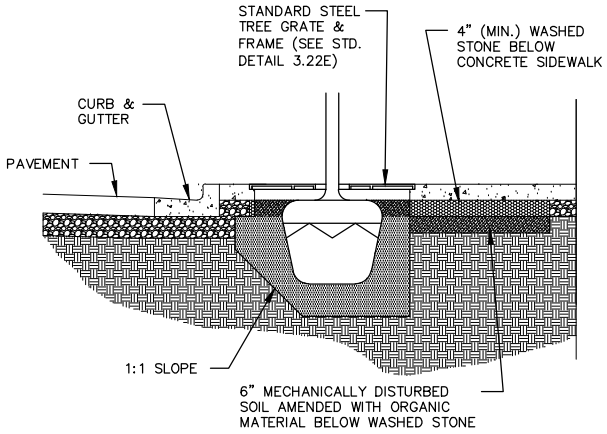

SECTION B–B

City of Asheville, NC Standard Specifications and Details Manual	SIDEWALK TREE PIT, STANDARD TREE GRATE WITH WASHED STONE BORDER	REVISIONS DATE / DESCRIPTION	STD. NO. 3.22D

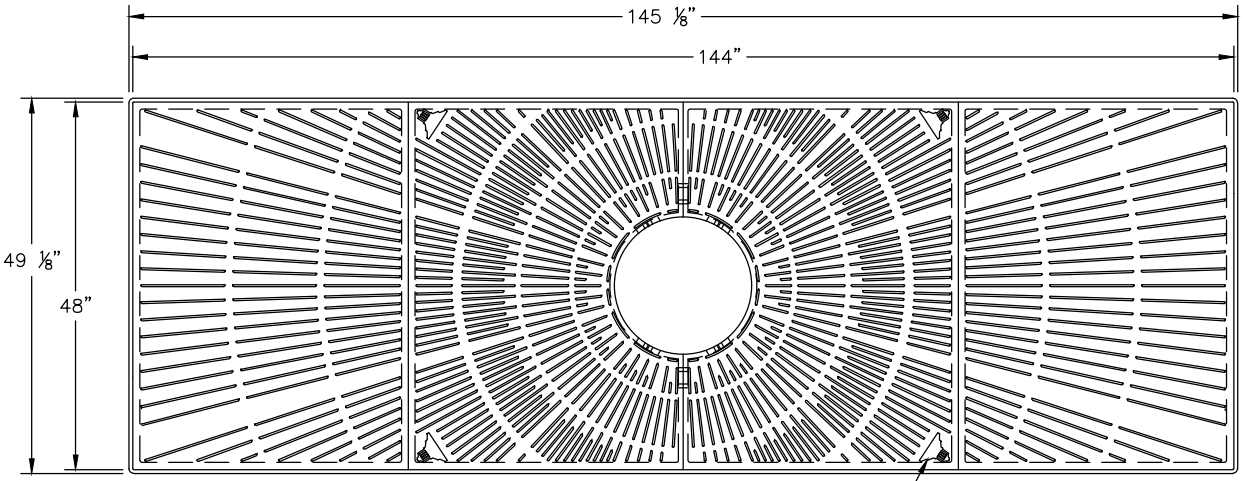

48"X144" TREE GRATE

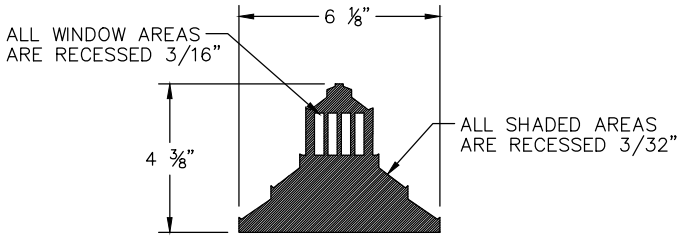

LOGO

RECESSED CITY OF ASHEVILLE LOGO LOCATED AT CORNERS OF TREE GRATE AS SHOWN (SEE LOGO DETAIL FOR SIZE)

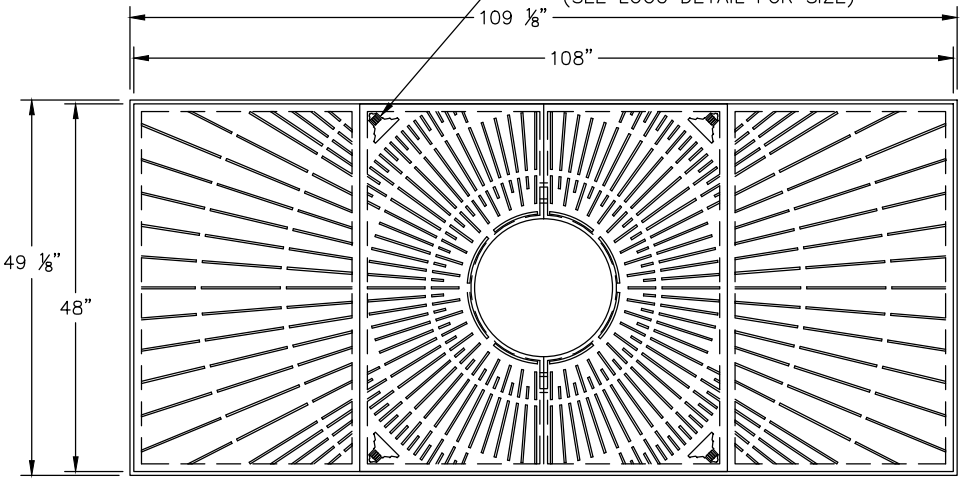

48"X108" TREE GRATE

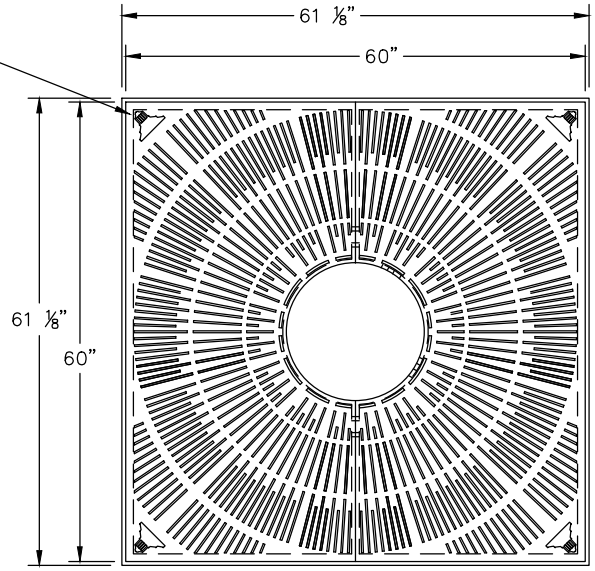

60"X60" TREE GRATE

NOTES:

1. FOR TREES TO BE PLANTED WITHIN SIDEWALKS 8 FT WIDE OR LESS, USE NEENAH FOUNDRY COMPANY R-8707 60"X60" TREE GRATE & FRAME OR EQUAL WITH ASHEVILLE LOGO AS SHOWN.
2. FOR DESIGNS TO THE EXTEND LIFE EXPECTANCY OF TREES PLANTED WITHIN SIDEWALKS 8 FT WIDE OR WIDER, THE RECOMMENDED SIZE TREE GRATE IS THE NEENAH FOUNDRY COMPANY R-8815 48"X144 EXTENDED TREE GRATE & FRAME OR EQUAL WITH ASHEVILLE LOGO AS SHOWN. OR THE NEENAH FOUNDRY COMPANY R-8817 48"X108 EXTENDED TREE GRATE & FRAME OR EQUAL WITH ASHEVILLE LOGO AS SHOWN.
3. MOUNT AND ASSEMBLE TREE GRATE & FRAME AS PER NEENAH FOUNDRY COMPANY SPECIFICATIONS.

City of Asheville, NC Standard Specifications and Details Manual	SIDEWALK TREE GRATE & FRAME	REVISIONS DATE / DESCRIPTION	STD. NO. 3.22E

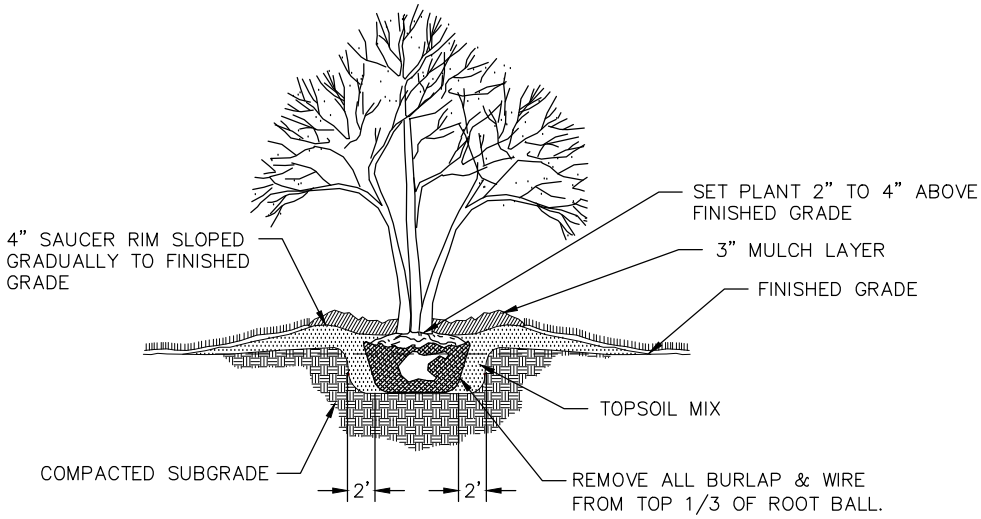

TREE PLANTING

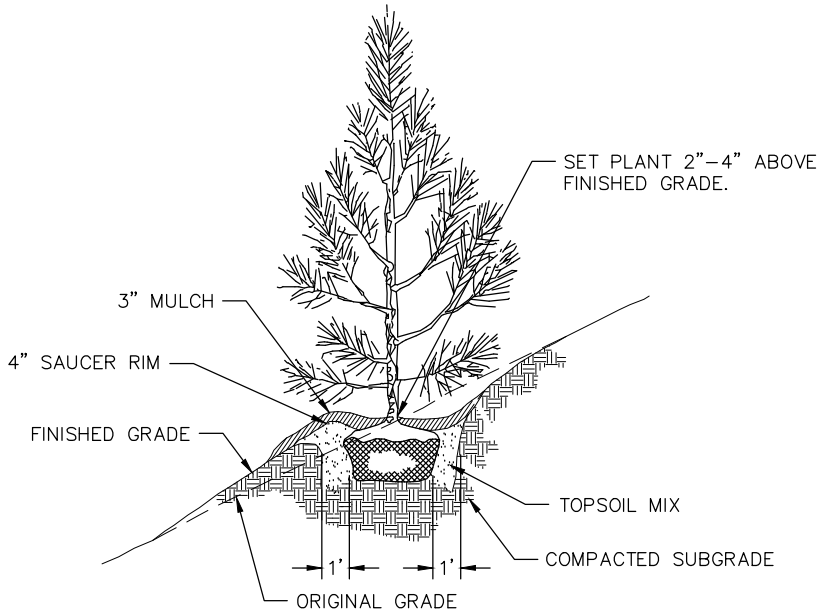

TREE PLANTING ON SLOPE

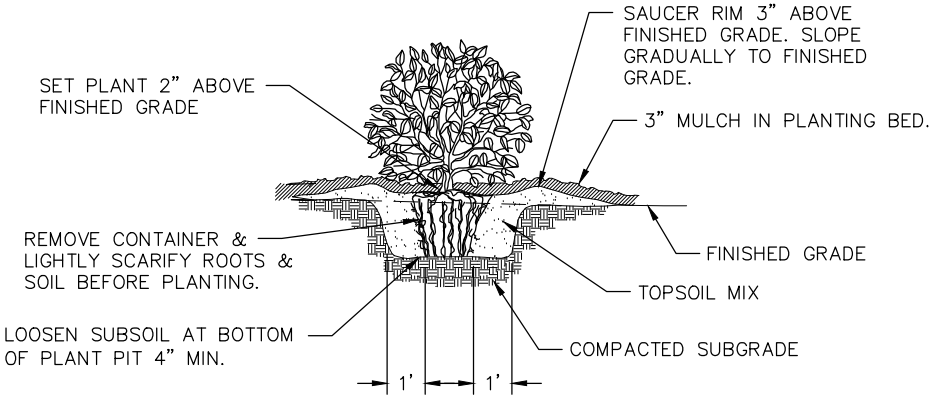

SHRUB PLANTING

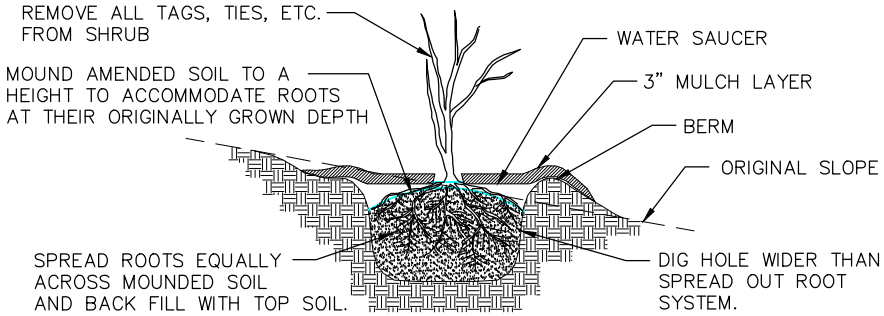

NOTE: STORE BARE ROOT MATERIAL IN A COOL STORAGE AREA WITH THEIR ROOTS KEPT MOIST AND EITHER TARPED OR WET DOWN DAILY. BARE ROOT MATERIAL SHOULD NEVER BE ALLOWED TO DRY OUT. ROOT SYSTEMS SHOULD BE DIPPED IN A SLURRY OF HYDROGEL FOR 30 MIN. BEFORE PLANTING.

TREE/SHRUB BARE ROOT PLANTING DETAIL

City of Asheville, NC Standard Specifications and Details Manual	TREE & SHRUB PLANTING DETAIL	REVISIONS DATE / DESCRIPTION	STD. NO. 3.22F

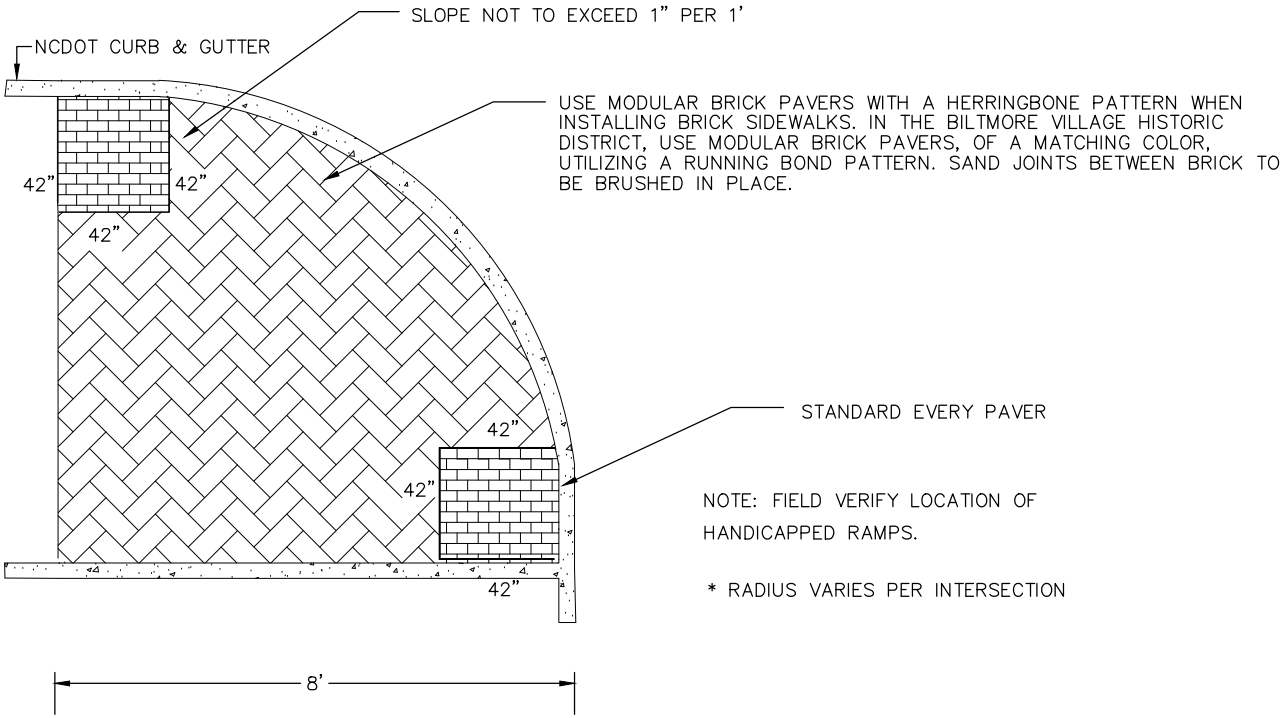

NOTE: FIELD VERIFY LOCATION OF HANDICAPPED RAMPS.

* RADIUS VARIES PER INTERSECTION

NOT TO SCALE

City of Asheville, NC Standard Specifications and Details Manual	RADIUS CONCRETE KEYSTONE	REVISIONS DATE / DESCRIPTION	STD. NO. 3.23

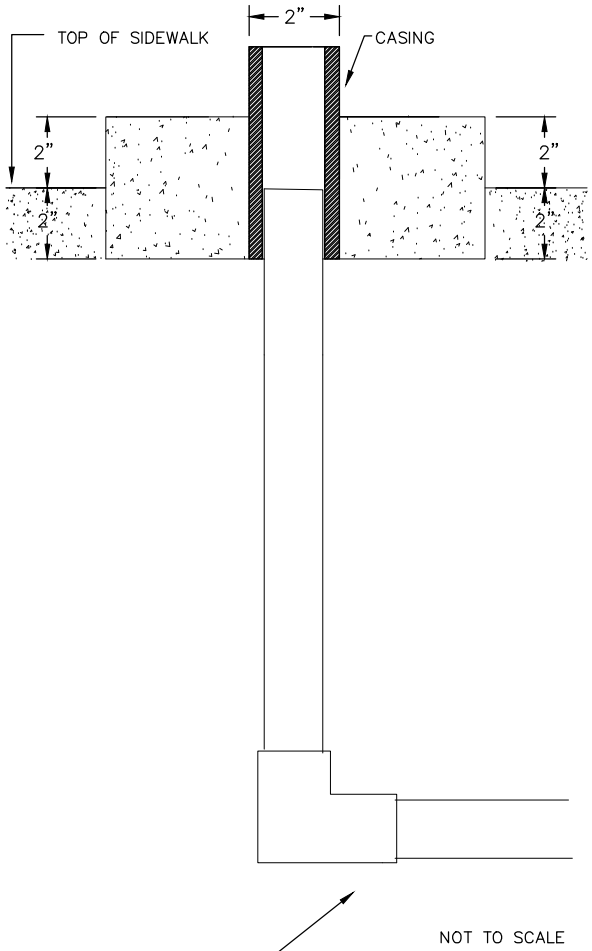

* 2" P.V.C. CONDUIT (24" DEEP) RUN
* ENTIRE LENGTH OF NEW SIDEWALK TO UNDERGROUND SERVICE.
* FIELD VERIFY LOCATION OF BASES

City of Asheville, NC

Standard Specifications and Details Manual

LAMP POST BASE

REVISIONS	
DATE	DESCRIPTION

STD. NO.

3.24

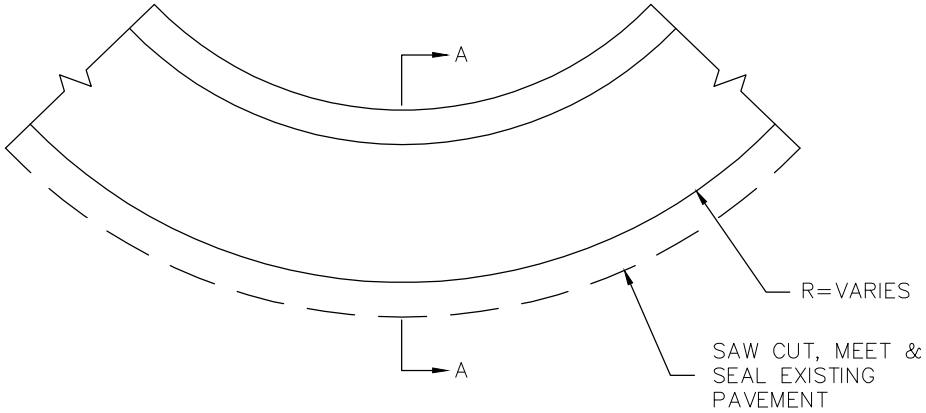

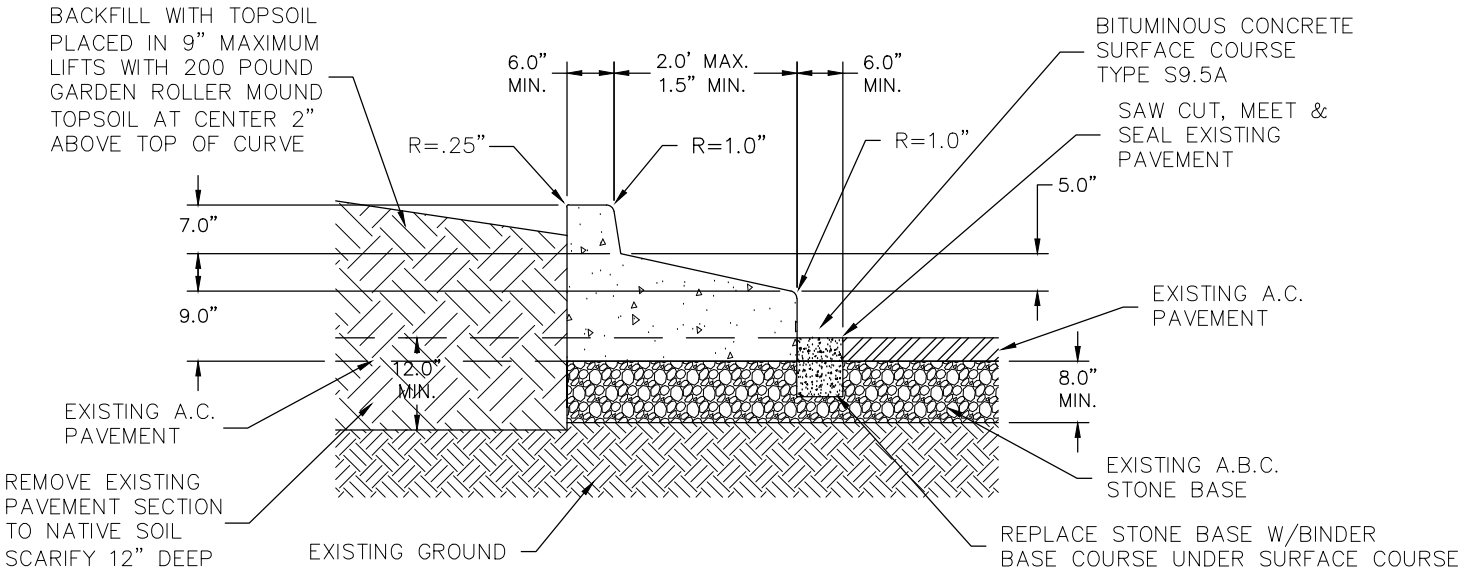

SECTION A–A

City of Asheville, NC Standard Specifications and Details Manual	CONCRETE CIRCLE	REVISIONS DATE / DESCRIPTION	STD. NO. 3.25

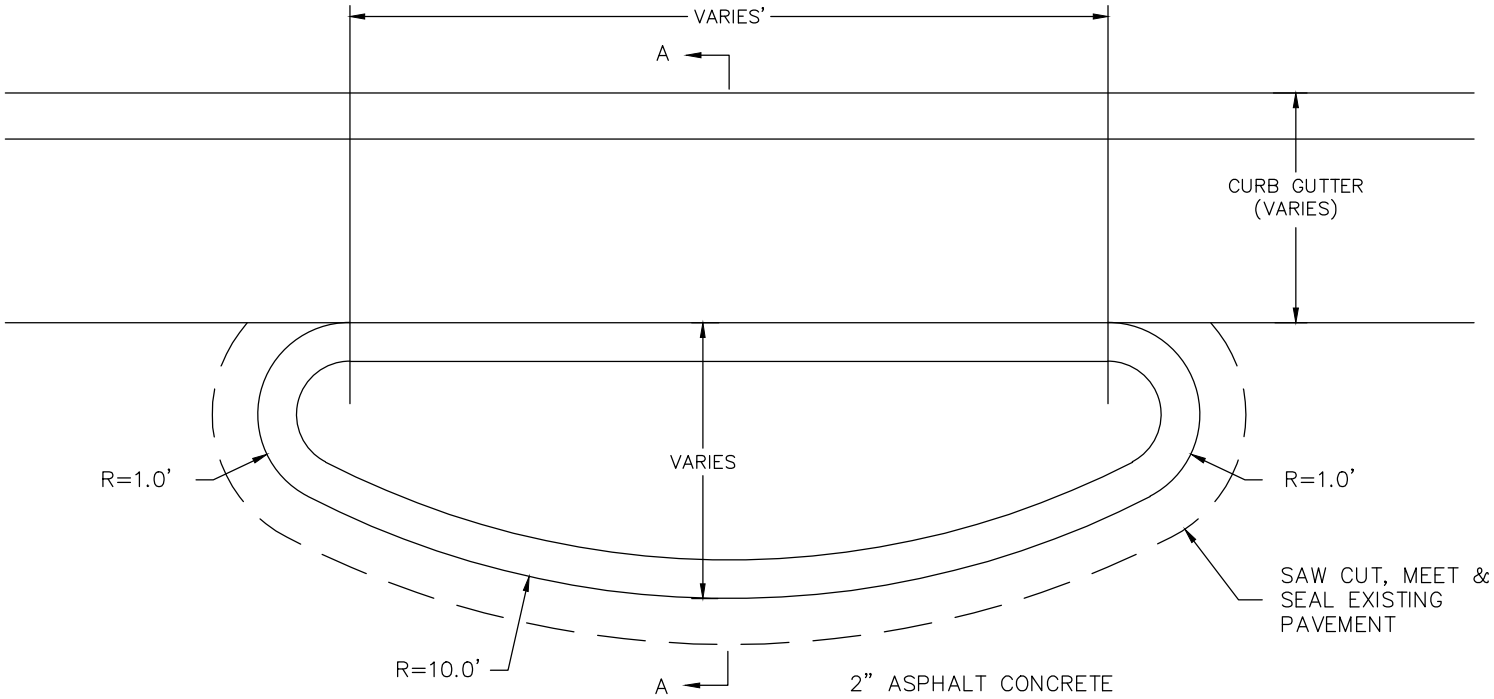

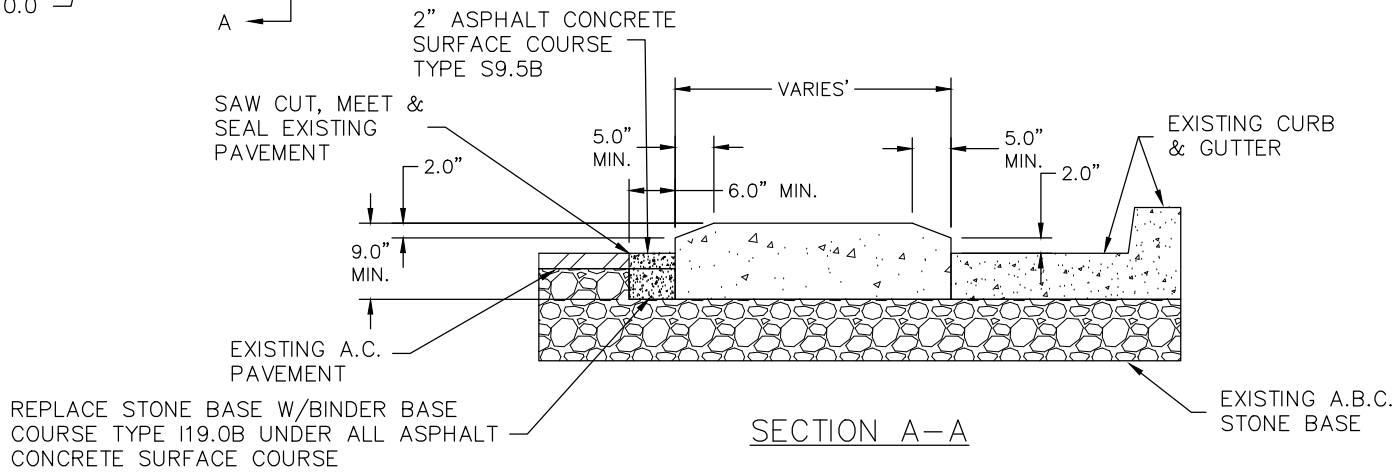

SECTION A–A

City of Asheville, NC

Standard Specifications and Details Manual

MOUNTABLE CONCRETE ISLAND

REVISIONS	
DATE	DESCRIPTION

STD. NO.

3.26

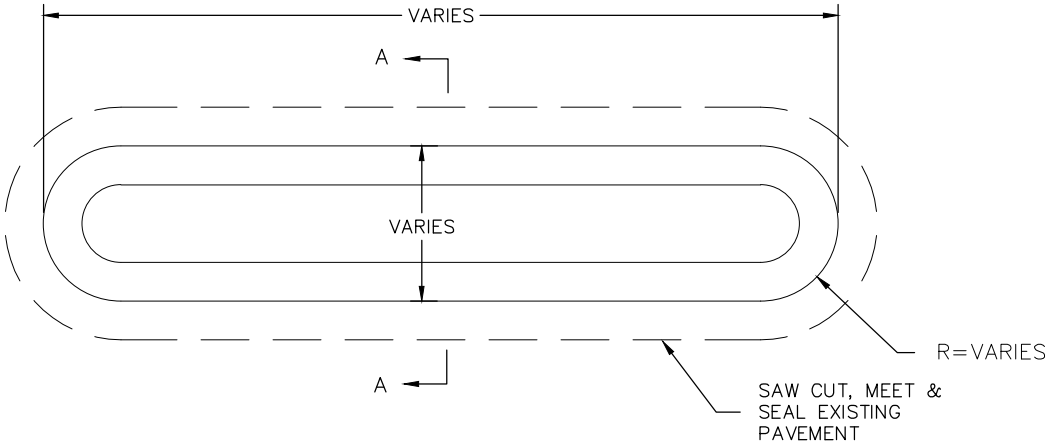

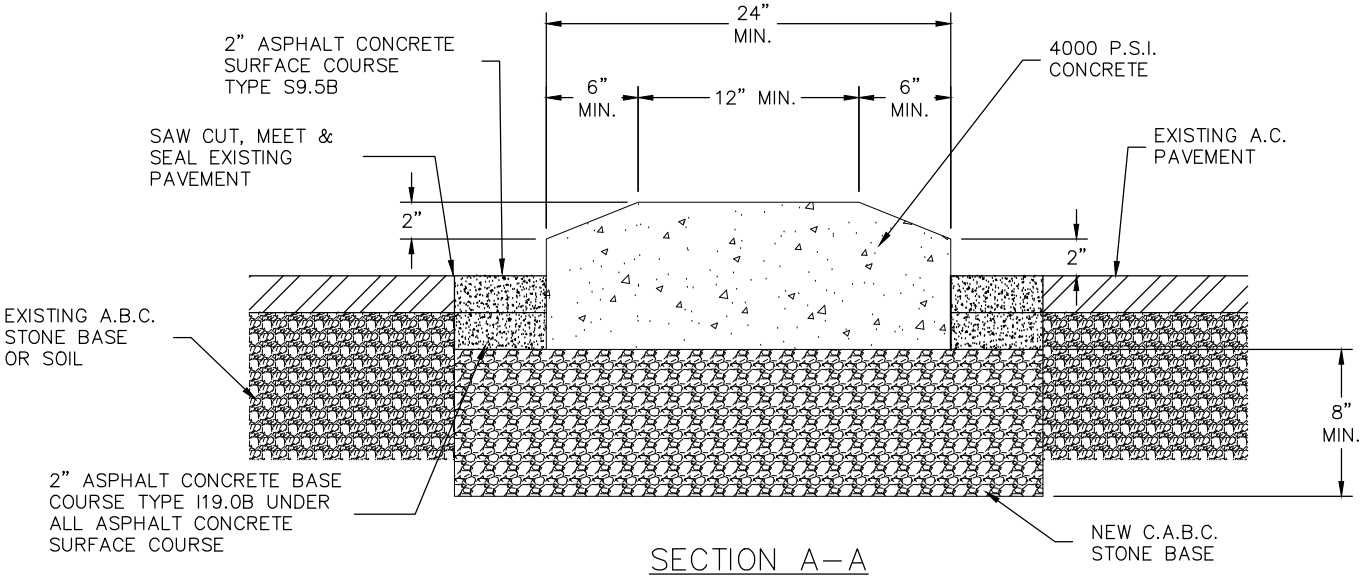

SECTION A–A

City of Asheville, NC Standard Specifications and Details Manual	MOUNTABLE CONCRETE TRAFFIC SEPARATOR ISLAND	REVISIONS DATE / DESCRIPTION	STD. NO. 3.27

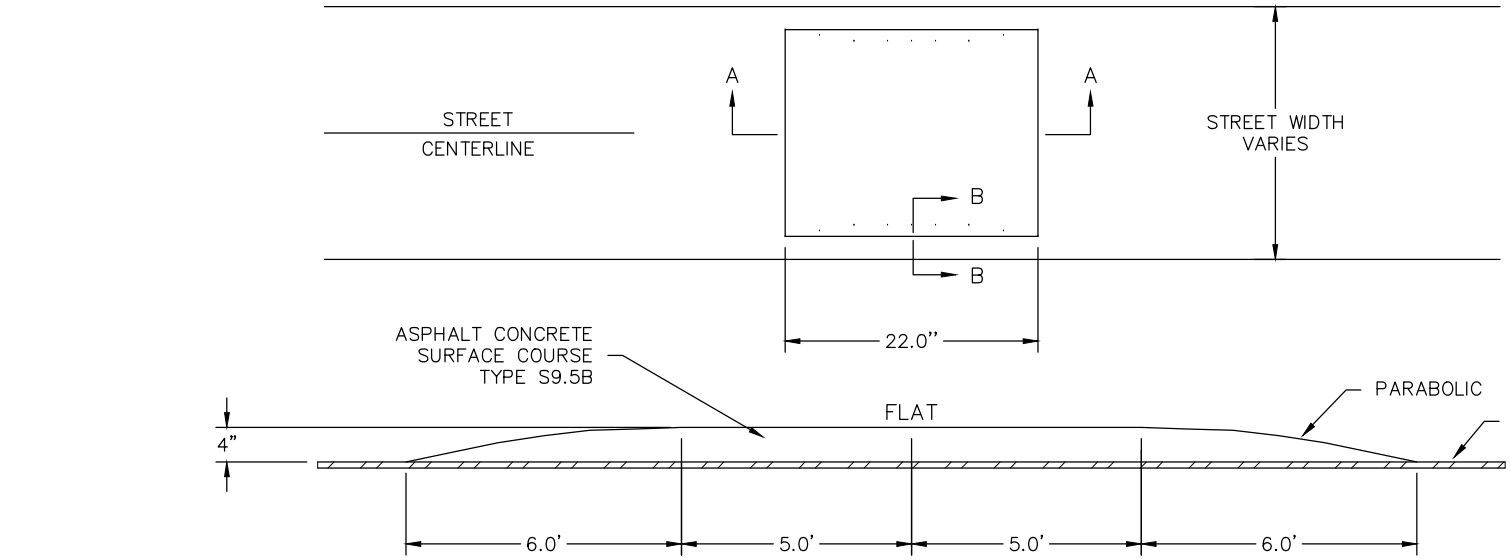

SECTION A–A

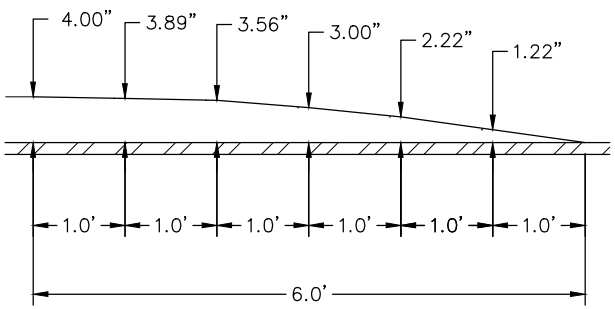

PARABOLIC SECTION

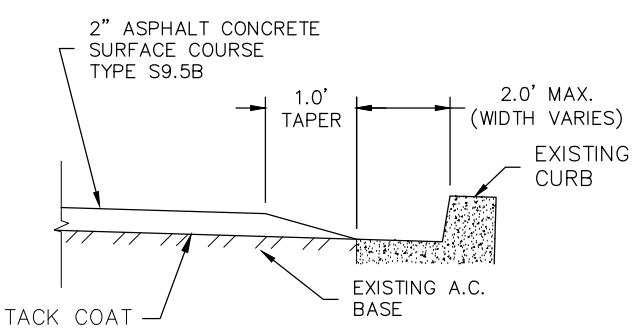

CURB DETAIL

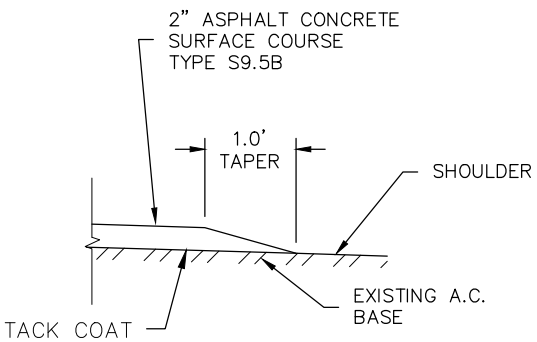

SHOULDER DETAIL FOR
STREETS WITHOUT CURB

SECTION B–B

City of Asheville, NC **Standard Specifications and Details Manual**	**22' COLLECTOR STREET SPEED TABLE**	REVISIONS DATE / DESCRIPTION	STD. NO. **3.28**

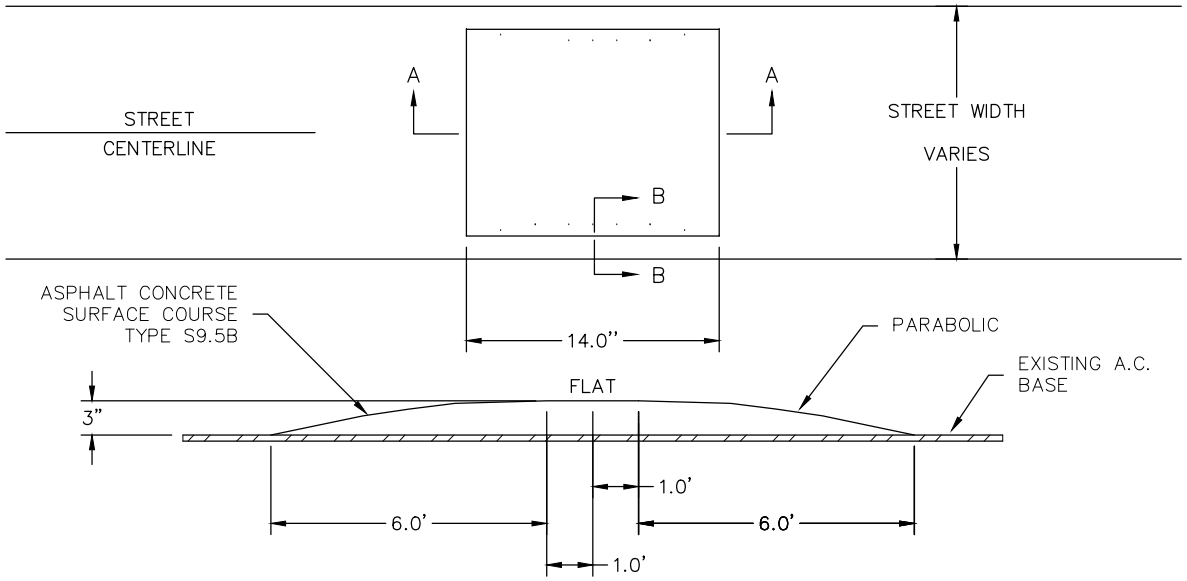

SECTION A–A

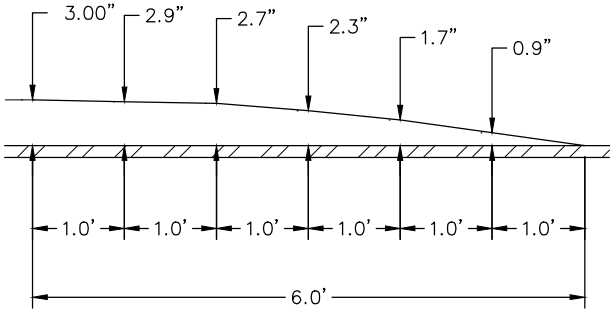

PARABOLIC SECTION

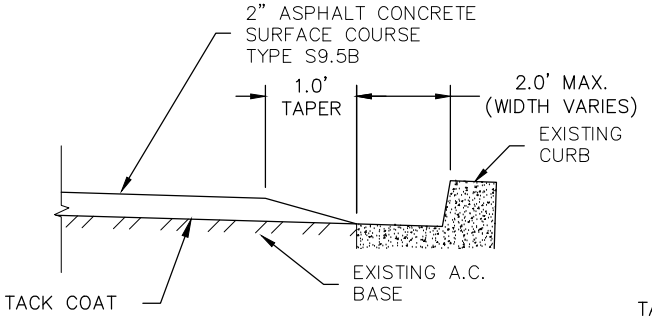

CURB DETAIL

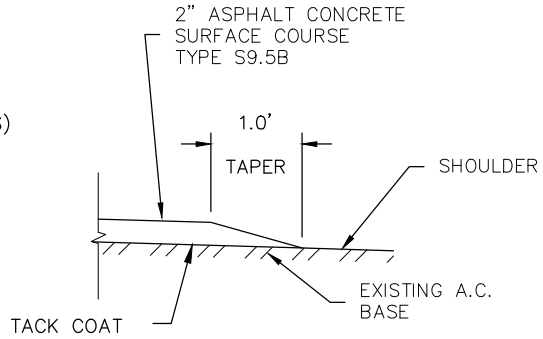

SHOULDER DETAIL FOR
STREETS WITHOUT CURB

SECTION B–B

City of Asheville, NC **Standard Specifications and Details Manual**	**14' COLLECTOR STREET SPEED HUMP**	REVISIONS DATE / DESCRIPTION	STD. NO. **3.29**

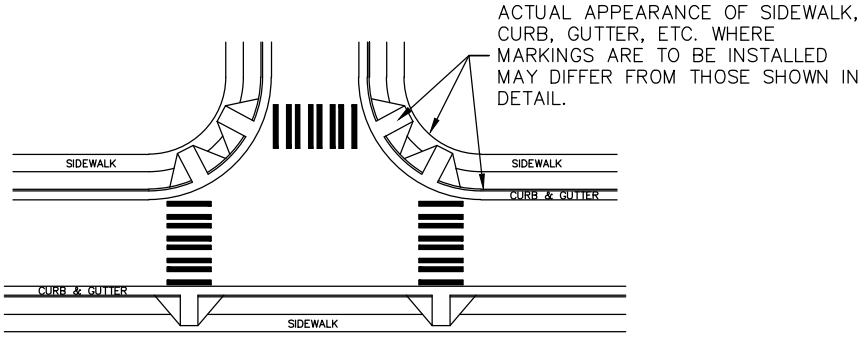

DETAIL SHOWING TYPICAL LOCATION OF HIGH VISIBILITY CROSS WALK MARKINGS

NOTES:

1. WHERE ON STREET PARKING EXIST, INSTALL FIRST TRANSVERSE 7 TO 8 FEET FROM THE CURB.

2. WHERE PARKING EXIST ON ONLY ONE SIDE OF THE ROAD AND THE CENTERLINE IS NOT MARKED, ASSUME THAT THE ROAD "CENTERLINE" IS AT THE MIDDLE OF WIDTH REMAINING AFTER ASSUMING 7' FOR PARKING

3. WHERE TRAFFIC LANE LINES ARE NOT USED, AND PARKING CANNOT BE USED TO DEFINE LANES, USE A LANE WIDTH OF 10 FEET BEGINNING AT THE MARKED OR UNMARKED CENTERLINE OF THE ROADWAY. WHERE PARKING EXIST ON ONLY ONE SIDE OF THE ROAD AND THE CENTERLINE IS NOT MARKED, ASSUME THAT THE ROAD "CENTERLINE" IS AT THE MIDDLE OF WIDTH REMAINING AFTER ASSUMING 7' FOR PARKING

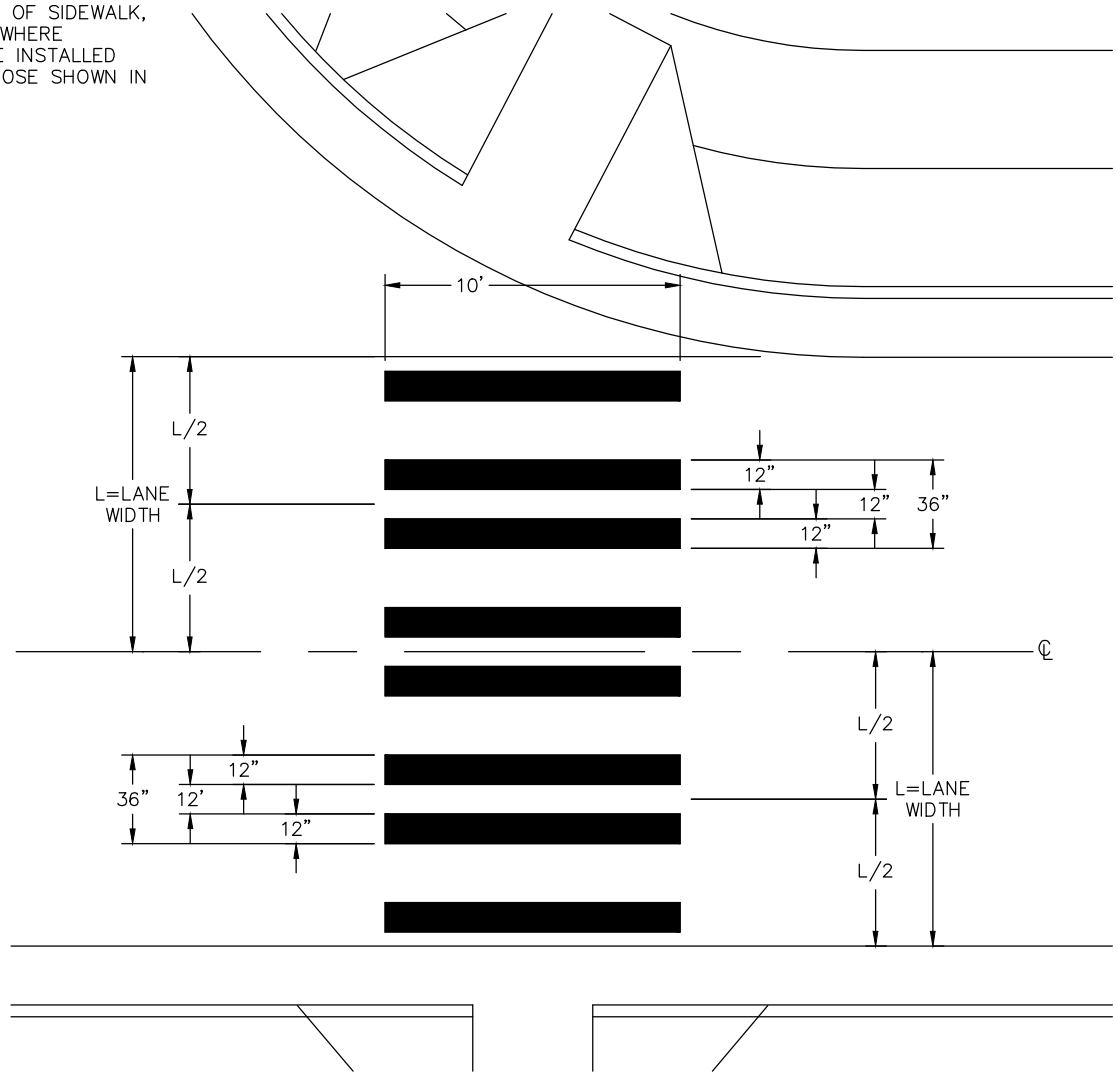

PLAN VIEW

City of Asheville, NC Standard Specifications and Details Manual	HIGH VISABILTY CROSS WALK	REVISIONS DATE / DESCRIPTION	STD. NO. 3.30

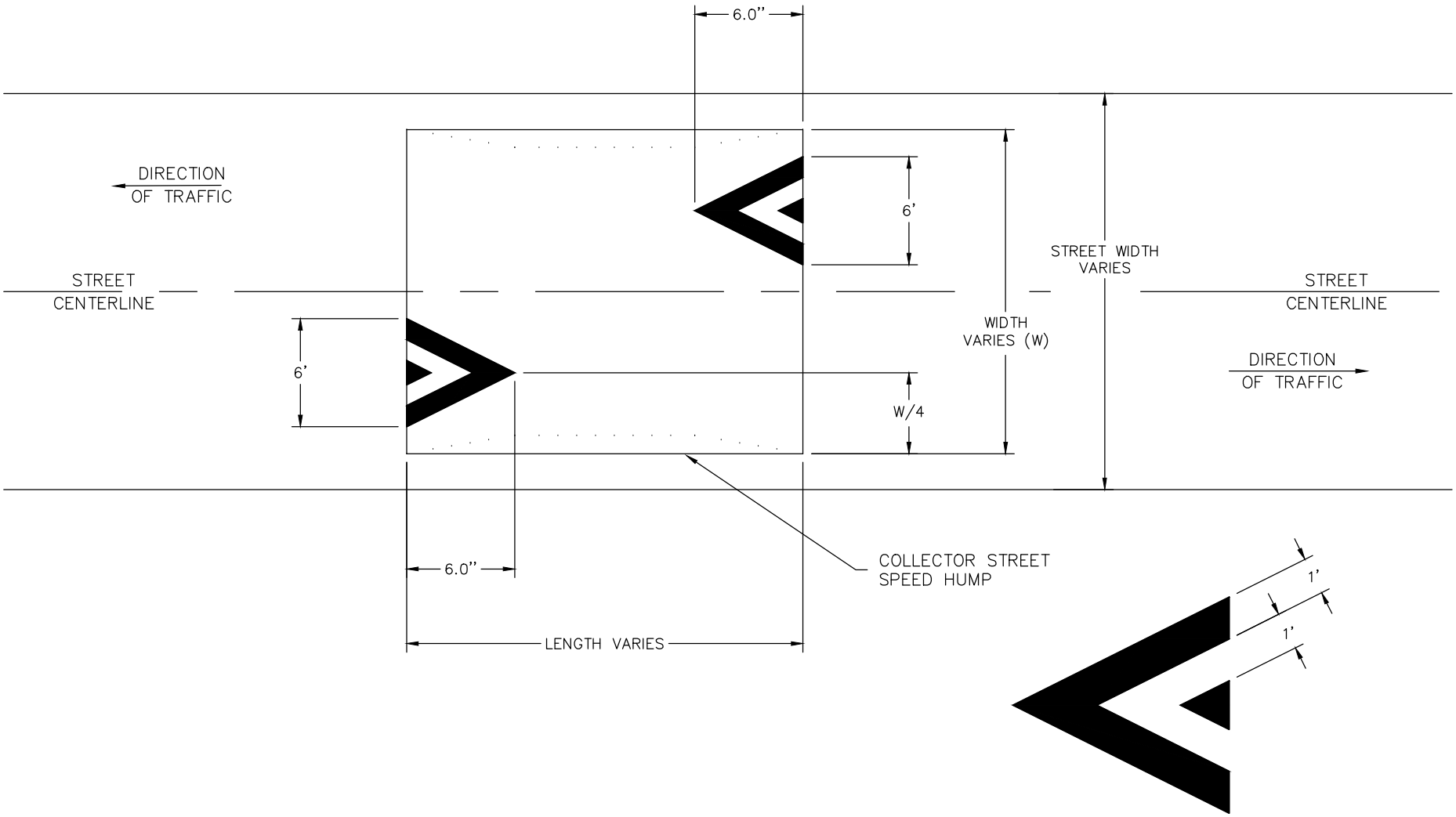

City of Asheville, NC

Standard Specifications and Details Manual

COLLECTOR STREET SPEED TABLE AND HUMP MARKINGS

REVISIONS	
DATE	DESCRIPTION

STD. NO.

3.31

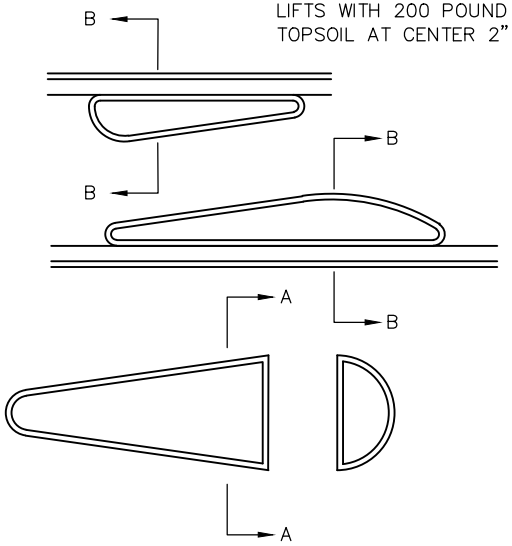

LATERIAL SHIFT ISLANDS

SHAPES AND SIZES VAIRY. SEE PLAN DRAWINGS

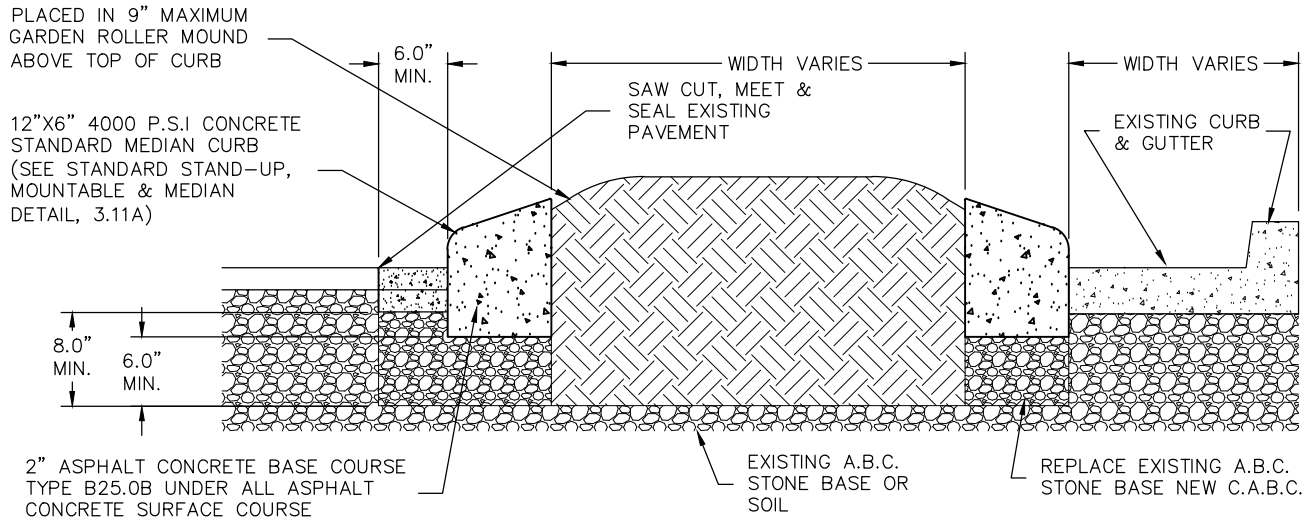

SECTION B–B

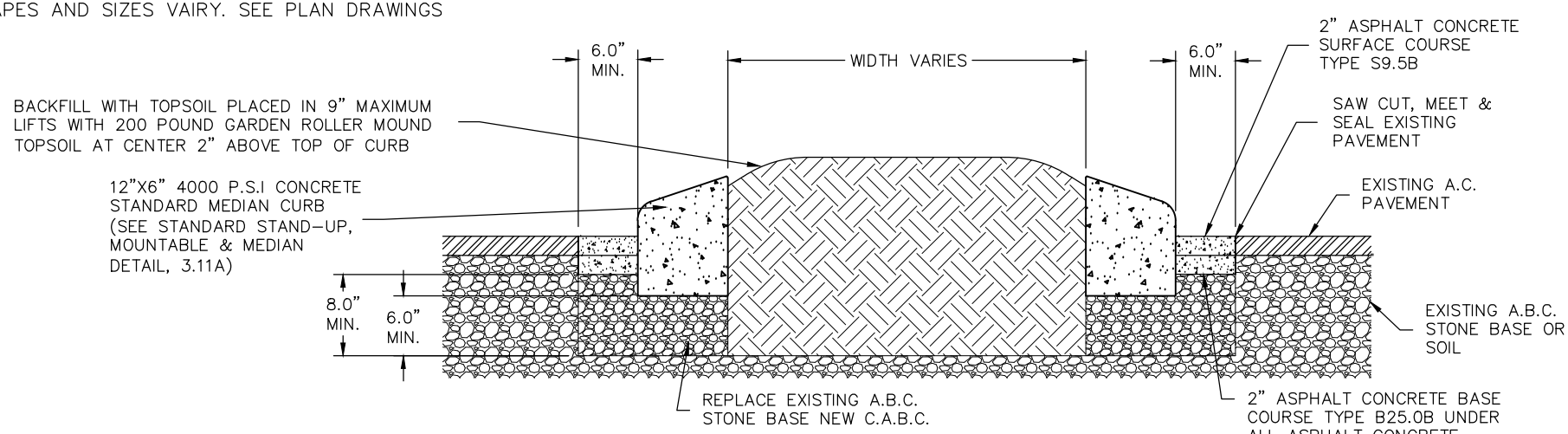

SECTION A–A

City of Asheville, NC Standard Specifications and Details Manual	LATERAL SHIFT ISLAND w/STANDARD MOUNTABLE CURB	REVISIONS DATE / DESCRIPTION	STD. NO. 3.32

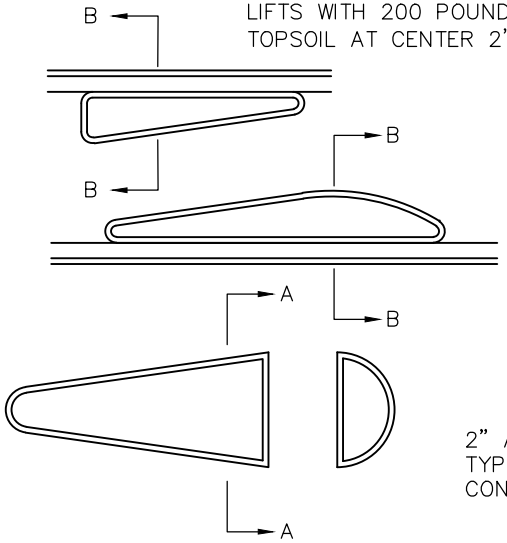

LATERIAL SHIFT ISLANDS

SHAPES AND SIZES VAIRY. SEE PLAN DRAWINGS

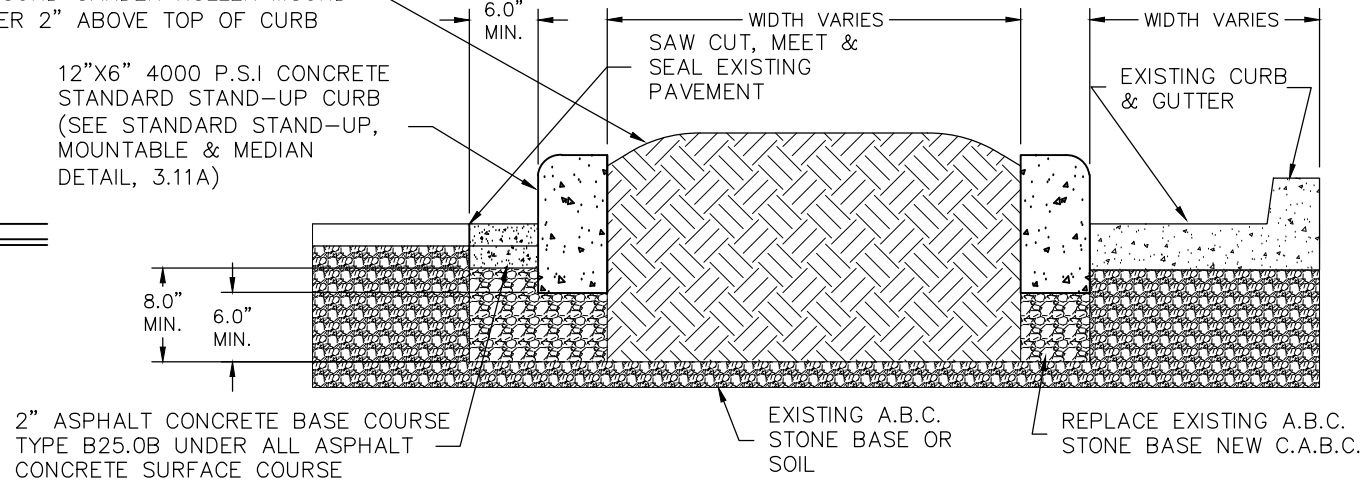

SECTION B–B

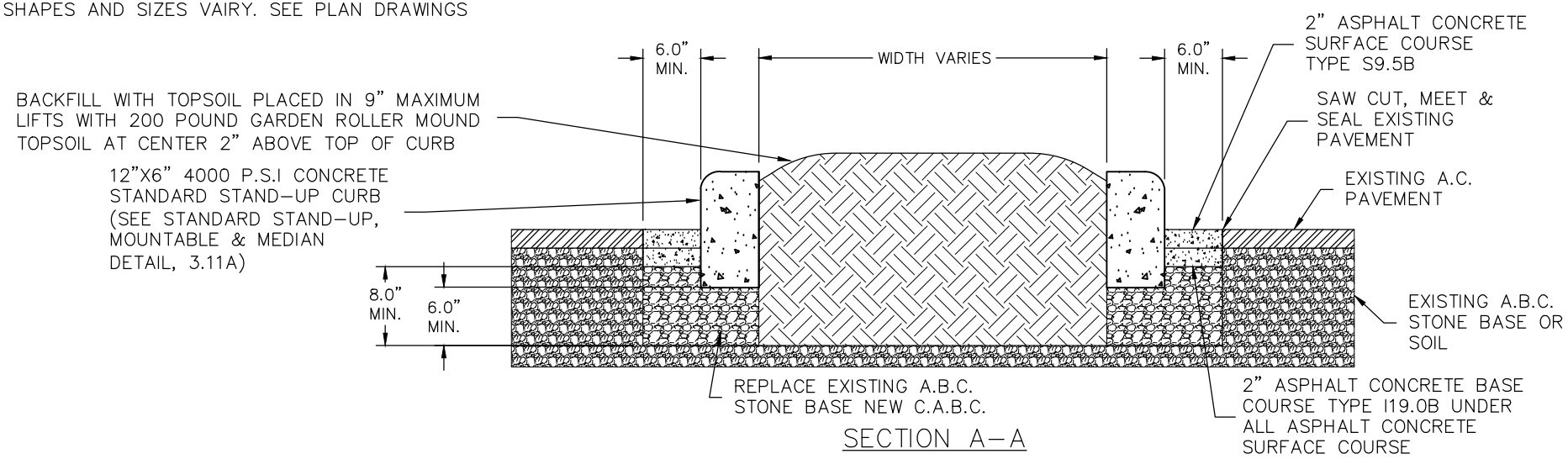

SECTION A–A

City of Asheville, NC Standard Specifications and Details Manual	LATERAL SHIFT ISLAND w/STANDARD STAND-UP CURB	REVISIONS DATE / DESCRIPTION	STD. NO. 3.33

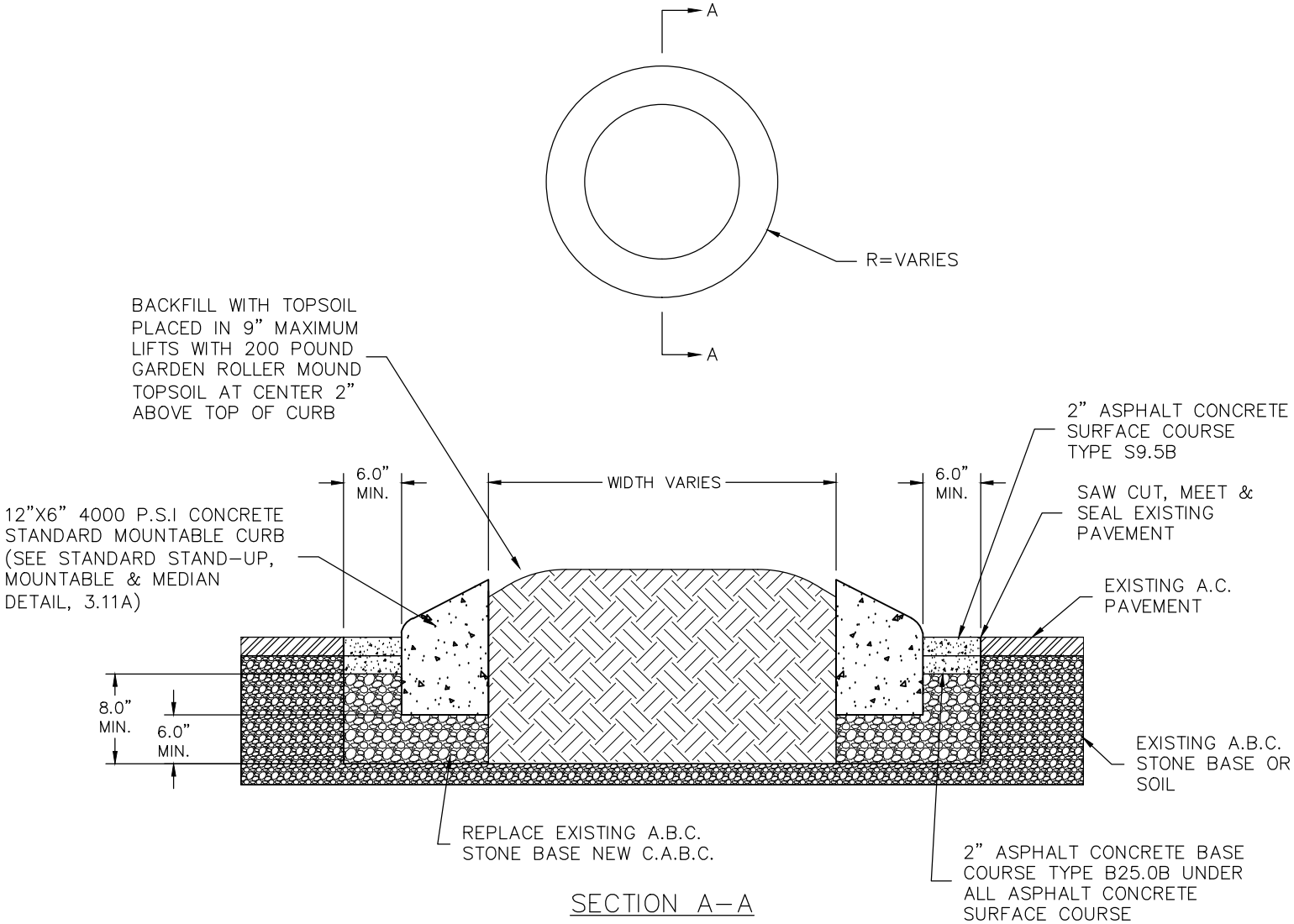

SECTION A–A

City of Asheville, NC Standard Specifications and Details Manual	TRAFFIC ISLAND w/STANDARD MOUNTABLE CURB	REVISIONS DATE / DESCRIPTION	STD. NO. 3.34

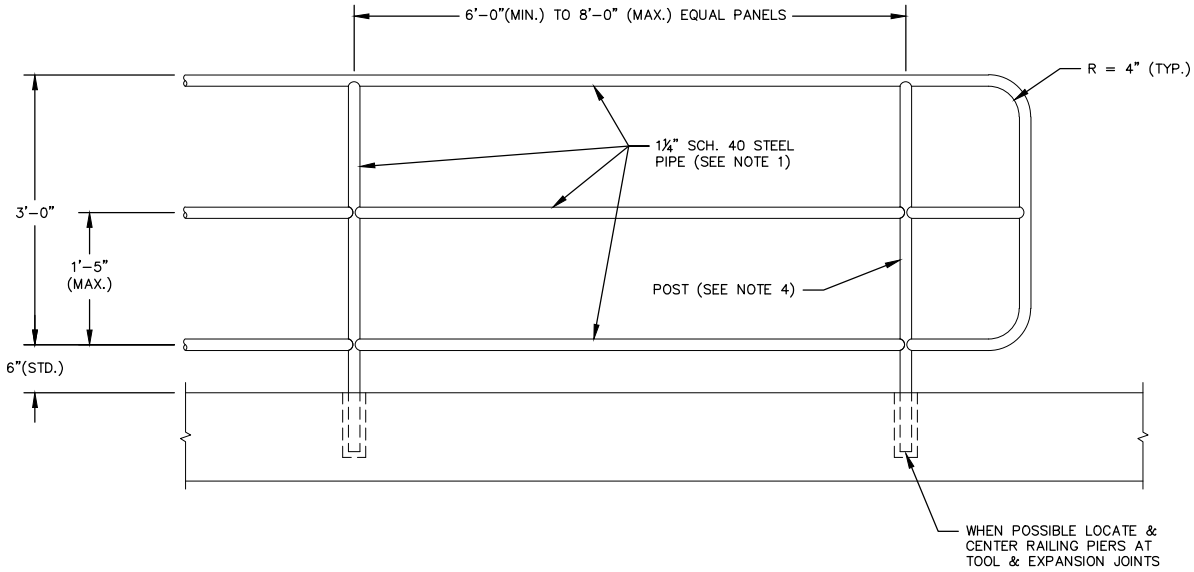

PLAN VIEW

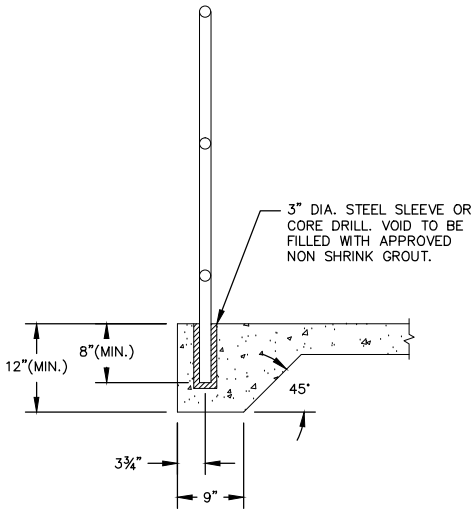

SECTION VIEW

NOTES:

1. CONSTRUCT PROPOSED STEEL PIPE RAIL OF 1 ¼" SCHEDULE 40 PLAIN END STEEL PIPE MEETING THE REQUIRMENTS OF ASTM A53.
2. CONSTRUCT STEEL PIPE IN ACCORDANCE WITH SECTION 1074 OF THE NCDOT STANDARD SPECIFICATION.
3. WELD IN ACCORDANCE WITH ARTICLE 1072-18 OF THE STANDARD SPECIFICATIONS.
4. ALL POST SECTIONS ARE TO BE CONSTRUCTED PLUMB, NOT PERPENDICULAR TO THE SIDEWALK.
5. USE APPROVED NON-SHRINK GROUT IN ACCORDANCE WITH SECTION 1003 OF THE NCDOT STANDARD SPECIFICATIONS FOR HANDRAIL FOOTINGS.
6. PLACEMENT OF HANDRAIL IN RELATION TO WALL AND SIDEWALK MAY BE MODIFIED AS DIRECTED BY THE ENGINEER.
7. PIPE SURFACE TO BE PREPARED BEFORE PRIMING IN ACCORDANCE WITH THE SOCIETY FOR PROTECTIVE COATING SPECIFICATIONS.
8. PIPE TO BE DELIVERED TO WORK SITE PRIMED PAINTED.
9. PAINT SCHEDULE:

   PRIME COAT, SHERWIN WILLIAMS B50NZ0003 - KEM BOND® HIGH SOLIDS ALKYD UNIVERSAL METAL PRIMER RED OXIDE OR EQUAL.
   INTERMEDIATE COAT, SHERWIN WILLIAMS B58T00604 - MACROPOXY® 645 FAST CURE EPOXY A ULTRADEEP/CLEAR TINT BASE OR EQUAL.
   TOP COAT, MIXTURE AS PER MANUFACTURE INSTRUCTIONS OF SHERWIN WILLIAMS B65B00600-ACROLON® 218 HS POLYURETHANE - GLOSS PART A, BLACK AND B65V00600-ALCOLON® 218 HS POLYURETHANE - GLOSS PART B HARDENER OR EQUAL.

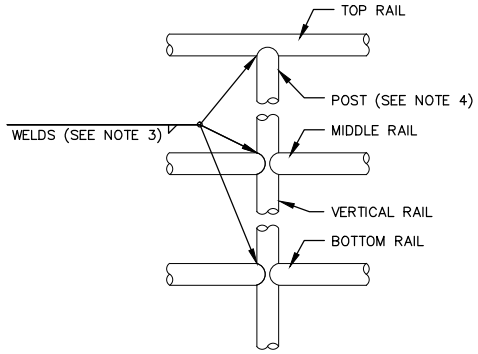

RAIL CONNECTION

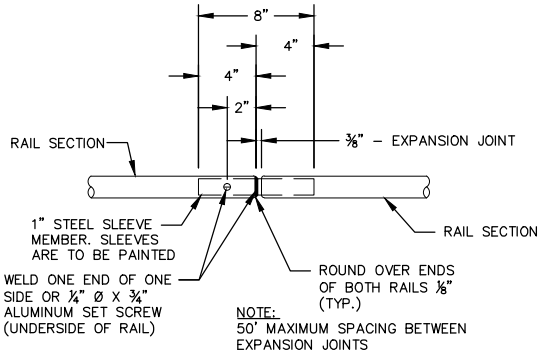

RAILING EXPANSION JOINT

City of Asheville, NC

Standard Specifications and Details Manual

PEDESTRIAN SAFETY RAILING

REVISIONS	
DATE	DESCRIPTION

STD. NO.

3.35

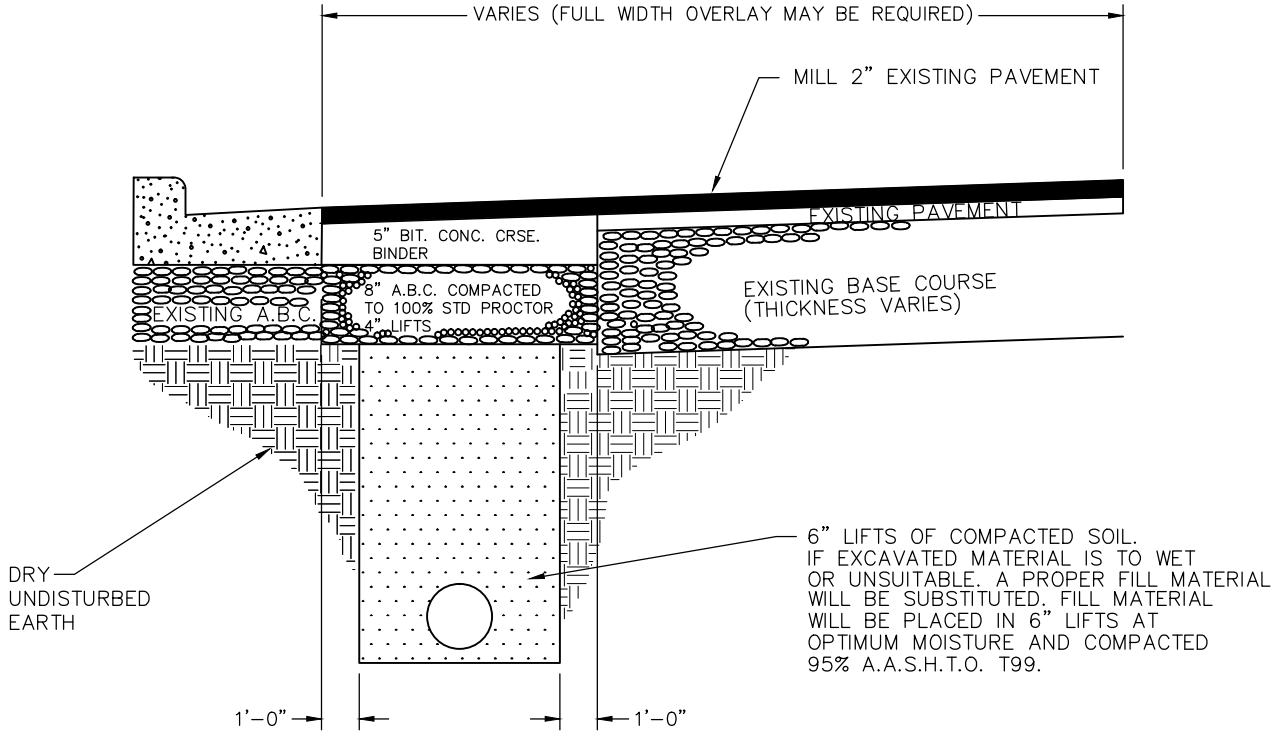

NOTE:

1. EDGES TO BE SAWED WITH A CONCRETE SAW TO A NEAT SQUARED EDGE BROOMED CLEAN OF DUST AND DRY BEFORE TACK COAT IS APPLIED.
2. EDGES AND OVERLAY AREAS TO BE TACKED WITH CRS-1OR CRD-2.
3. 6" LIFTS OR SUITABLE SOIL OR ABC AT OPTIMUM MOISTURE COMPACTED 100% A.A.S.H.T.O. T99, ALL WET OR UNSUITABLE MATERIAL TO BE REMOVED FROM SITE PRIOR TO BACKFILL.
4. N.C.D.O.T. APPROVED PATCH DETAIL.
5. ALL O.S.H.A. REQUIREMENTS SHALL BE ADHERED TO FOR TRENCHING OPERATIONS.

City of Asheville, NC Standard Specifications and Details Manual	PAVEMENT REMOVAL AND REPLACEMENT	REVISIONS DATE / DESCRIPTION	STD. NO. 5.01

NOTE:

1. IF PATCH EXCEEDS 30' IN LENGTH EXPANSION JOINTS TO MATCH EXISTING OR AT 30' INTERVALS, WHICHEVER IS LESS (JOINT SEALER–N.C.D.O.T. NO. 920.2)
2. ALL O.S.H.A. REQUIREMENTS SHALL BE ADHERED TO FOR TRENCHING OPERATIONS.

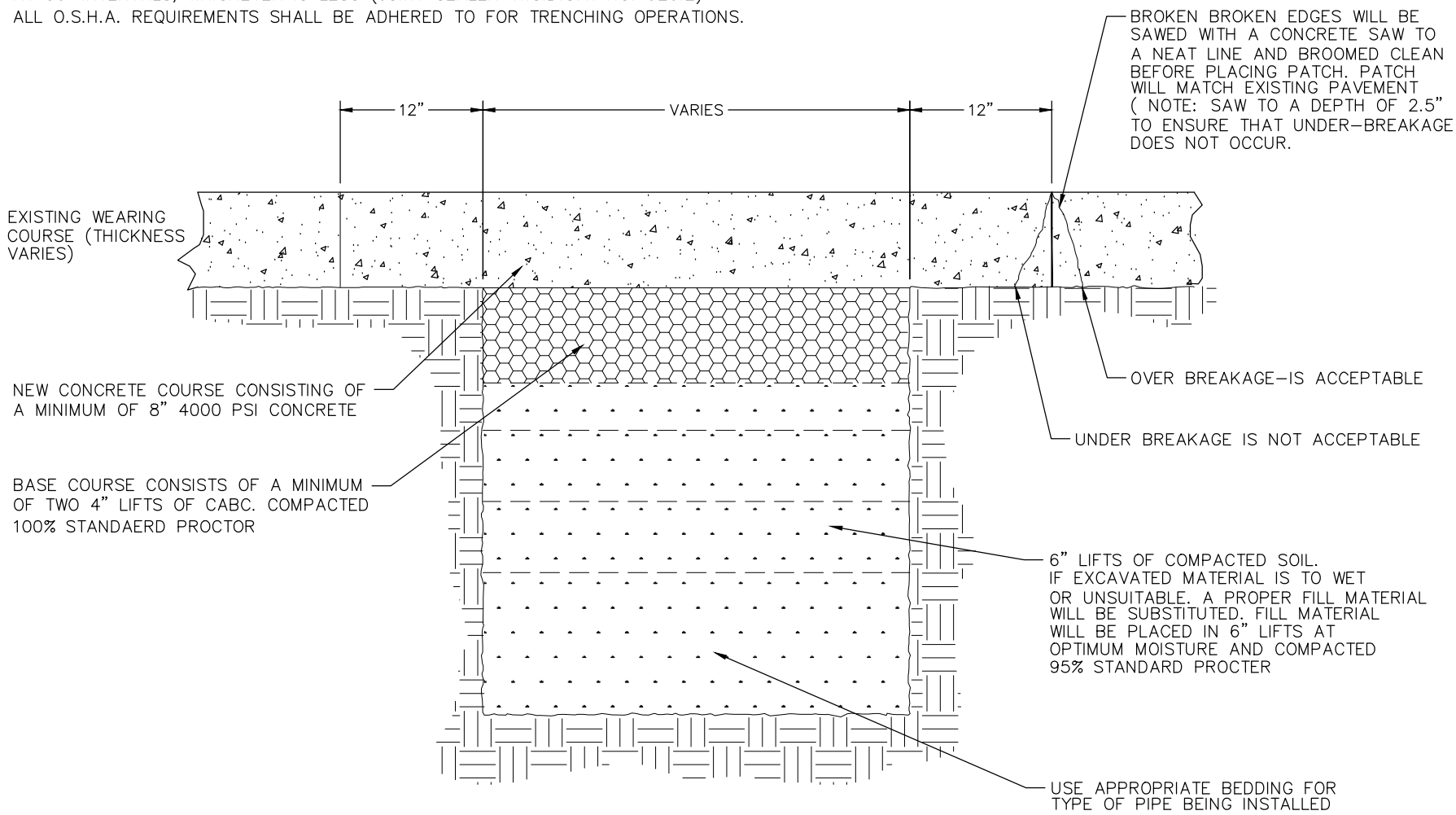

City of Asheville, NC Standard Specifications and Details Manual	RIGID PAVEMENT REPAIR	REVISIONS DATE / DESCRIPTION	STD. NO. 5.02

NOTE:

1. USE SUITABLE MATERIAL REMOVED DURING TRENCH EXCAVATION FOR BACKFILL UNLESS DIRECTED OTHERWISE BY ENGINEER.
2. ALL O.S.H.A. REQUIREMENTS SHALL BE ADHERED TO FOR TRENCHING OPERATIONS.

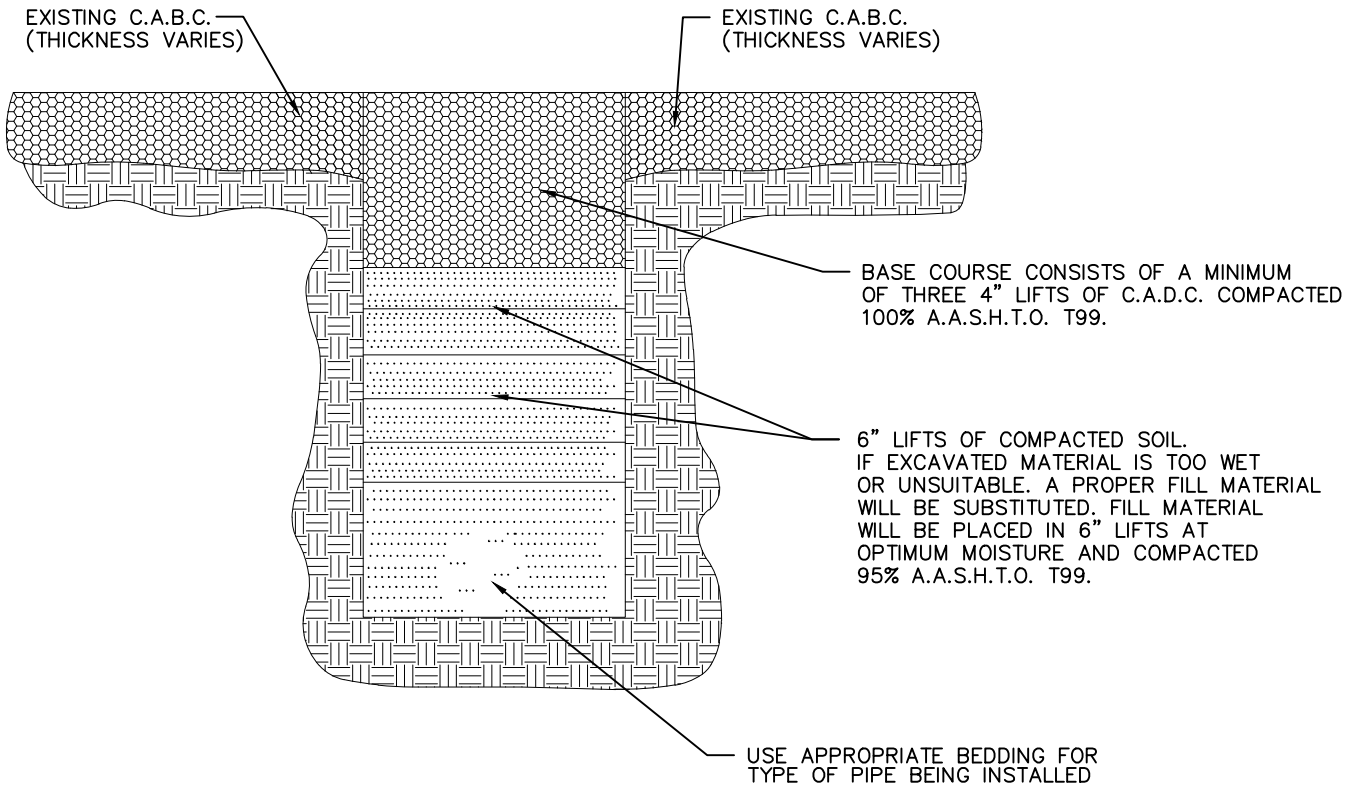

City of Asheville, NC Standard Specifications and Details Manual	GRAVEL SURFACE REPAIR AND BEDDING	REVISIONS DATE / DESCRIPTION	STD. NO. 5.03

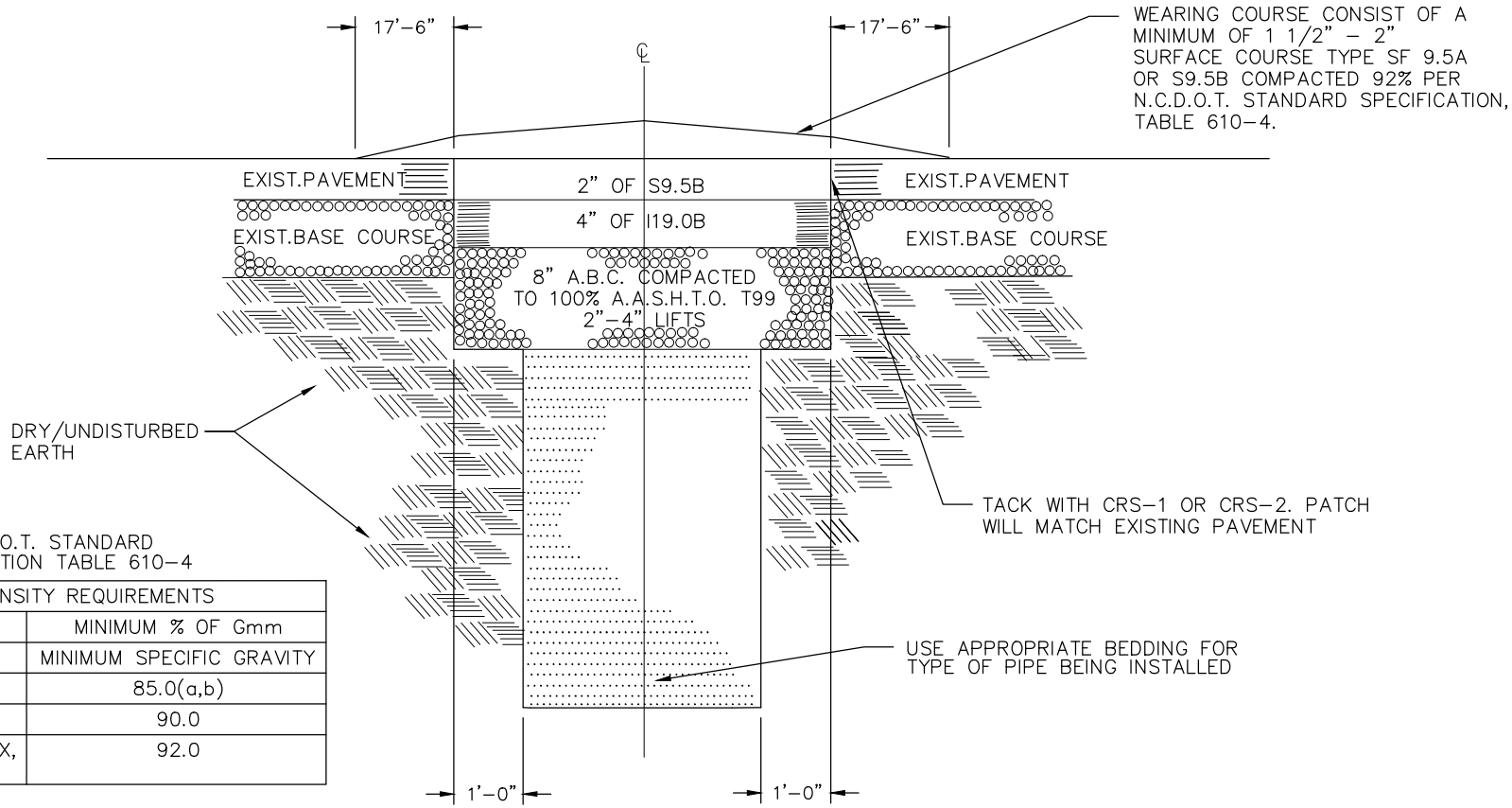

N.C.D.O.T. STANDARD SPECIFICATION TABLE 610-4

MINIMUM DENSITY REQUIREMENTS	
MIX TYPE	MINIMUM % OF Gmm
SUPER PAVE MIXES	MINIMUM SPECIFIC GRAVITY
S 4.75A	85.0(a,b)
SF 9.5A	90.0
S 9.5X, S 12.5X, I 19.0X, B 25.0X, B 37.5X	92.0

NOTE:

1. EDGES TO BE SAWED WITH A CONCRETE SAW TO A NEAT SQUARED EDGE, DRY BROOMED CLEAN OF DUST BEFORE TACK COAT IS APPLIED.
2. EDGES AND OVERLAY AREAS AND OVERLAY AREAS TO BE TACKED WITH RC OR AE-1 SPECIAL TACK.
3. 6" LIFTS OR SUITABLE SOIL OR ABC AT OPTIMUM MOISTURE COMPACTED 95% STANDARD PROCTOR , ALL WET OR UNSUITABLE MATERIAL TO BE REMOVED FROM SITE PRIOR TO BACKFILL.
4. N.C.D.O.T. APPROVED PATCH DETAIL
5. PATCH MUST BE SQUARE OR RECTANGULAR.
6. ALL O.S.H.A. REQUIREMENTS SHALL BE ADHERED TO FOR TRENCHING OPERATIONS.

City of Asheville, NC

Standard Specifications and Details Manual

PAVEMENT REMOVAL & REPLACEMENT FOR PERPENDICULAR CUTS

REVISIONS	
DATE	DESCRIPTION

STD. NO.

5.04

NOTE:

1. ALL O.S.H.A. REQUIREMENTS SHALL BE ADHERED TO FOR TRENCHING OPERATIONS.

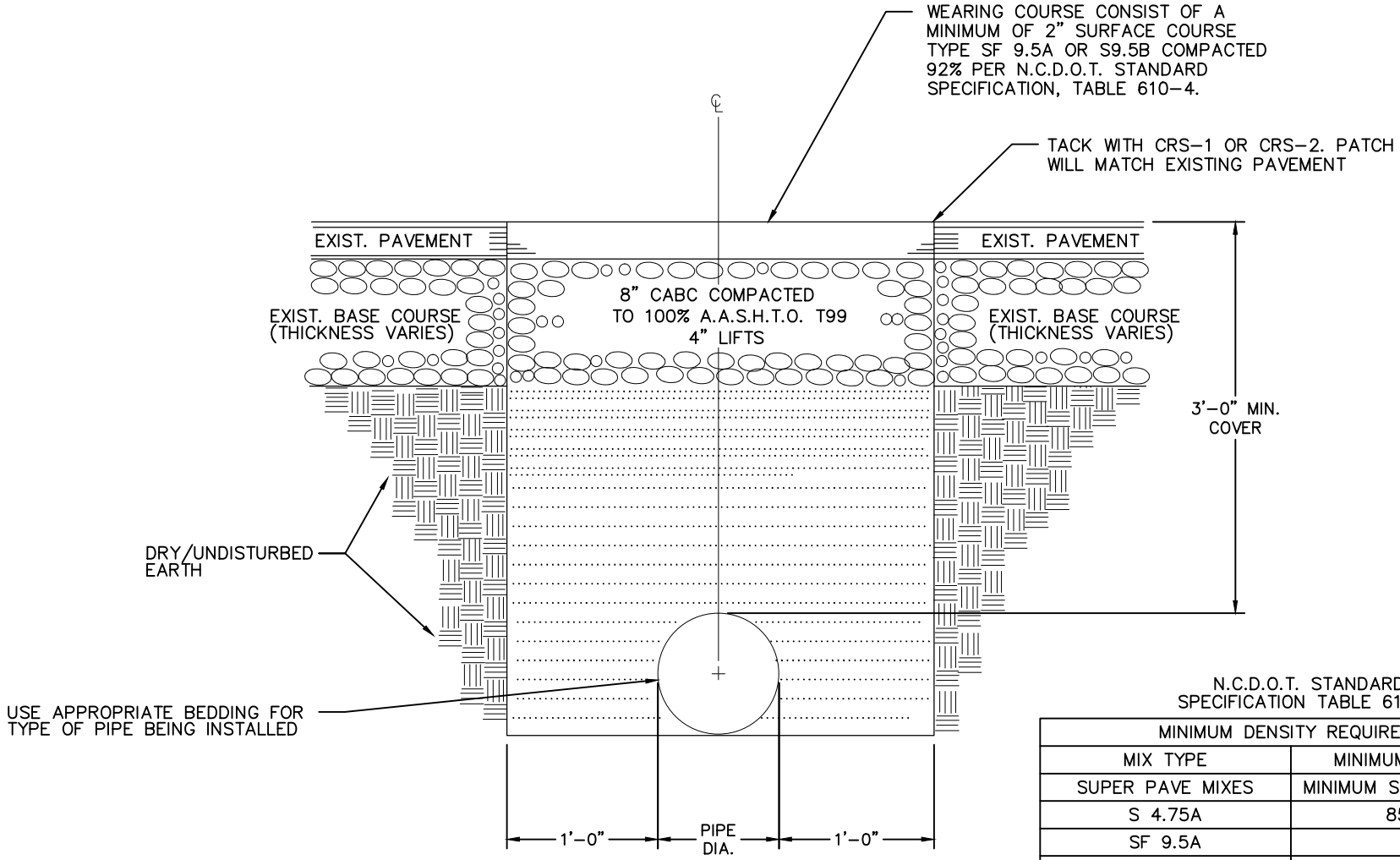

N.C.D.O.T. STANDARD SPECIFICATION TABLE 610–4

MINIMUM DENSITY REQUIREMENTS	
MIX TYPE	MINIMUM % OF Gmm
SUPER PAVE MIXES	MINIMUM SPECIFIC GRAVITY
S 4.75A	85.0(a,b)
SF 9.5A	90.0
S 9.5X, S 12.5X, I 19.0X, B 25.0X, B 37.5X	92.0

City of Asheville, NC

Standard Specifications and Details Manual

ASPHALT DRIVEWAY PAVEMENT REPLACEMENT

REVISIONS	
DATE	DESCRIPTION

STD. NO.

5.05

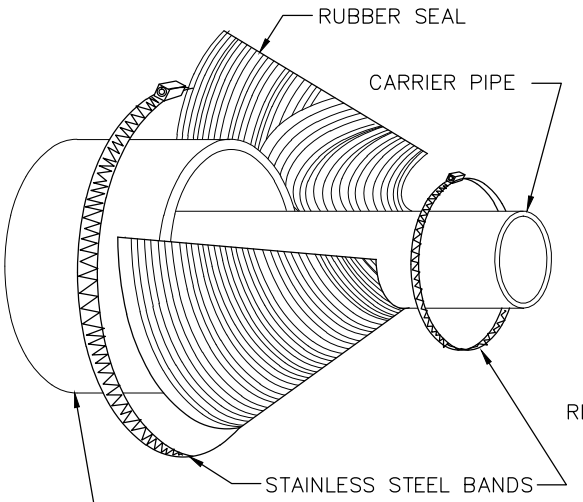

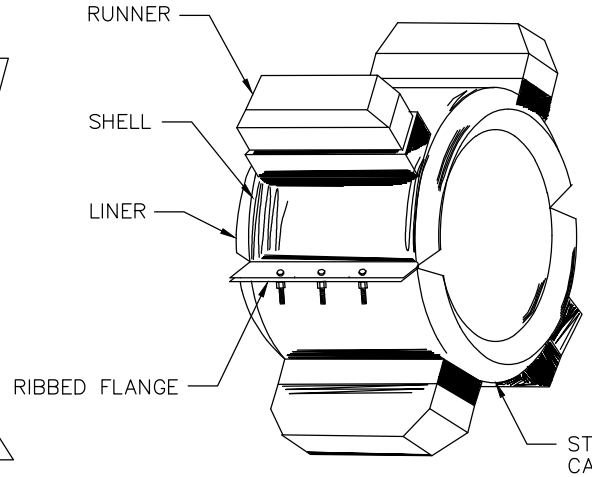

STAINLESS STEEL CASING SPACER 2 PER JOINT OF CARRIER PIPE (TYPICAL) MFG. BY CASCADE WATERWORKS, MFG. CO. OR APPROVED EQUAL.

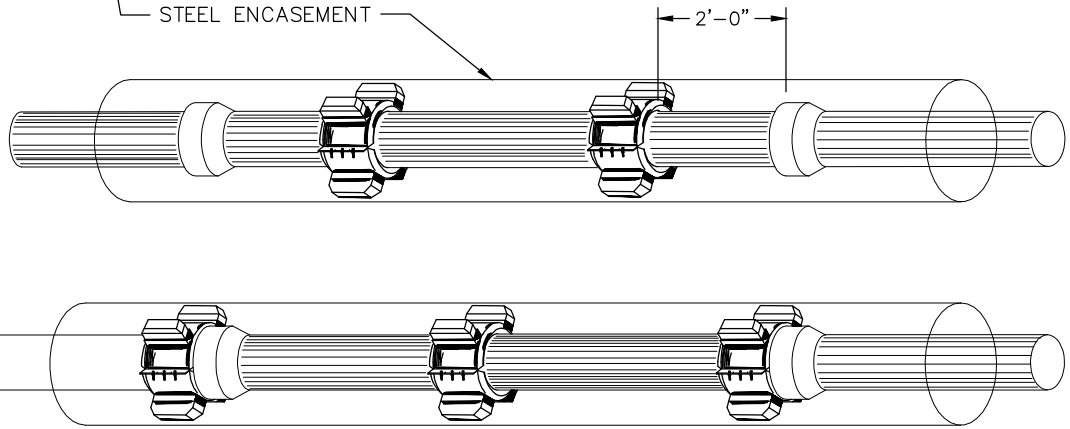

NOTE: STANDARD POSITIONING TO BE USED UNLESS OTHERWISE NOTED.

POSITIONING

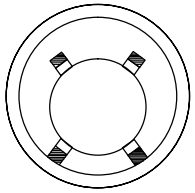

STANDARD: CARRIER LAYS ON CASING BOTTOM. TOP RUNNERS MAINTAIN SPACING IN THE EVENT OF ROLLOVER.

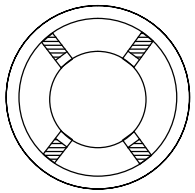

CENTERED: POSITIONS IN CENTER OF CASING. STABLE WITH MOST ANNULAR SPACE AVAILABLE FOR OTHER USES.

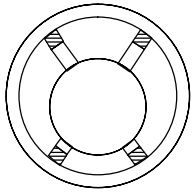

RESTRAINED: KEEPS CARRIER FROM FLOATING OR BUCKING UNDER SUDDEN PRESSURE SURGES.

NOTE:
1. FOR WATER LINE CARRIER PIPE, JOINTS SHALL BE RESTRAINED AS SPECIFIED IN CITY OF ASHEVILLE WATER RESOURCES STANDARD SPECIFICATIONS AND DETAILS MANUAL.

City of Asheville, NC Standard Specifications and Details Manual	CARRIER PIPE IN STEEL ENCASEMENT	REVISIONS DATE / DESCRIPTION	STD. NO. 5.06

NOTE:

1. USE SUITABLE MATERIAL REMOVED DURING TRENCH EXCAVATION FOR BACKFILL UNLESS DIRECTED OTHERWISE BY ENGINEER.
2. ALL O.S.H.A. REQUIREMENTS SHALL BE ADHERED TO FOR TRENCHING OPERATIONS.

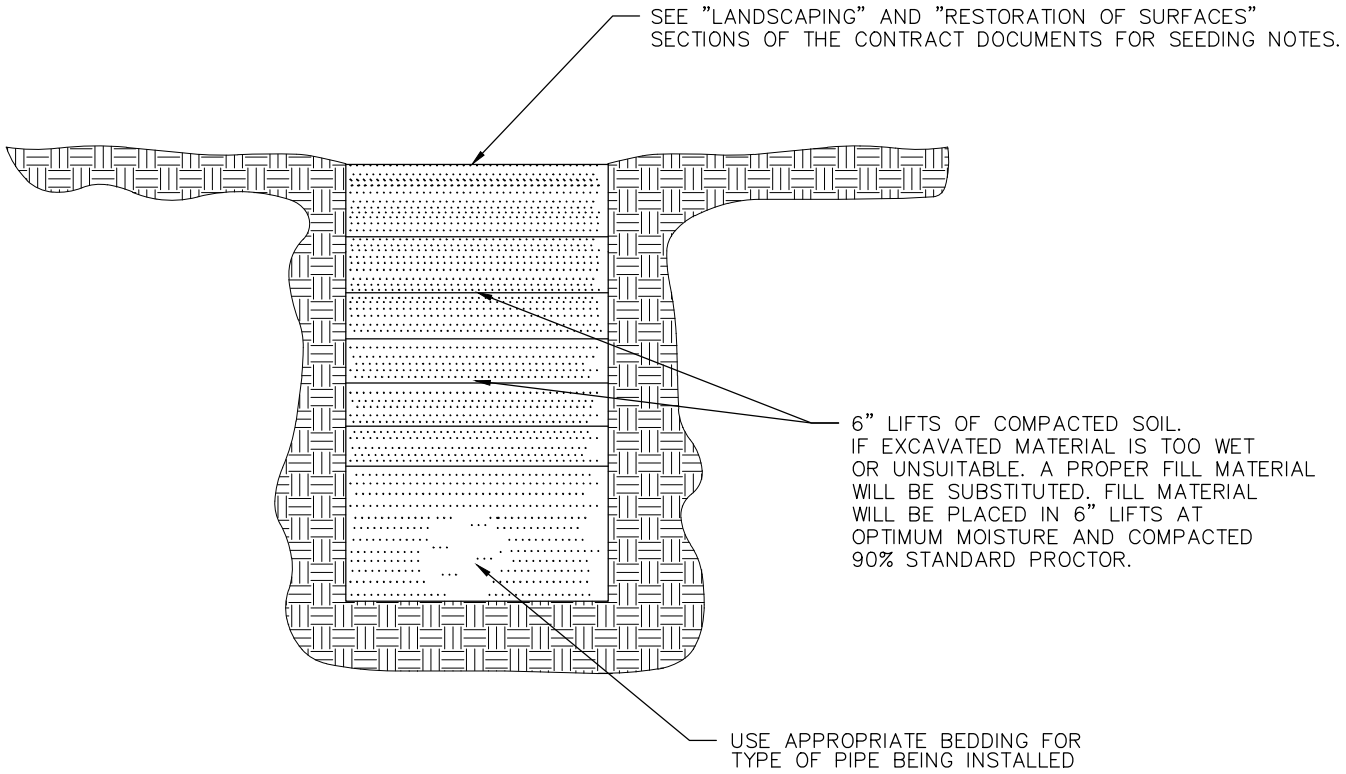

City of Asheville, NC Standard Specifications and Details Manual	SHOULDER REPAIR	REVISIONS DATE / DESCRIPTION	STD. NO. 5.07

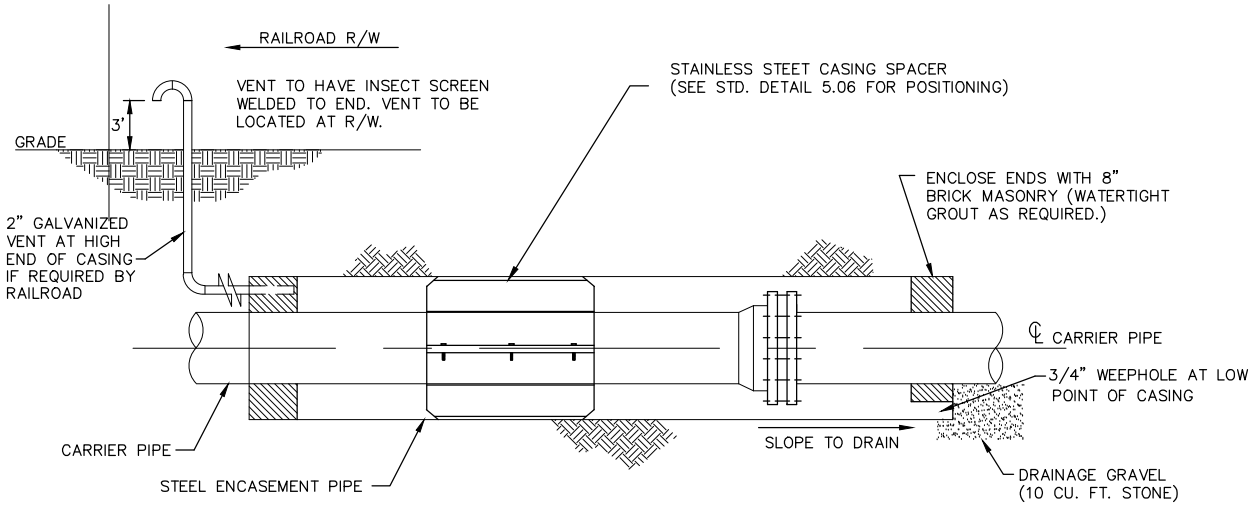

ELEVATION

NOTE:
1. STEEL "SPIDERS" MUST BE USED FOR SUPPORT OF THE CARRIER PIPE WITHIN THE CASING PIPE A MINIMUM OF 2 PER JOINT OF CARRIER PIPE IS REQUIRED..
2. FOR WATER LINE CARRIER PIPE, JOINTS SHALL BE RESTRAINED AS SPECIFIED IN CITY OF ASHEVILLE WATER RESOURCES STANDARD SPECIFICATIONS AND DETAILS MANUAL.

City of Asheville, NC Standard Specifications and Details Manual	TYPICAL STEEL ENCASEMENT AND CARRIER PIPE INSTALLATION UNDER RAILROAD	REVISIONS DATE / DESCRIPTION	STD. NO. 5.08

NOTE:
1. EDGES TO BE SAWED WITH A CONCRETE SAW TO A NEAT SQUARED EDGE BROOMED CLEAN OF DUST BEFORE TACK COAT IS APPLIED.
2. ALL O.S.H.A. REQUIREMENTS SHALL BE ADHERED TO FOR TRENCHING OPERATIONS.

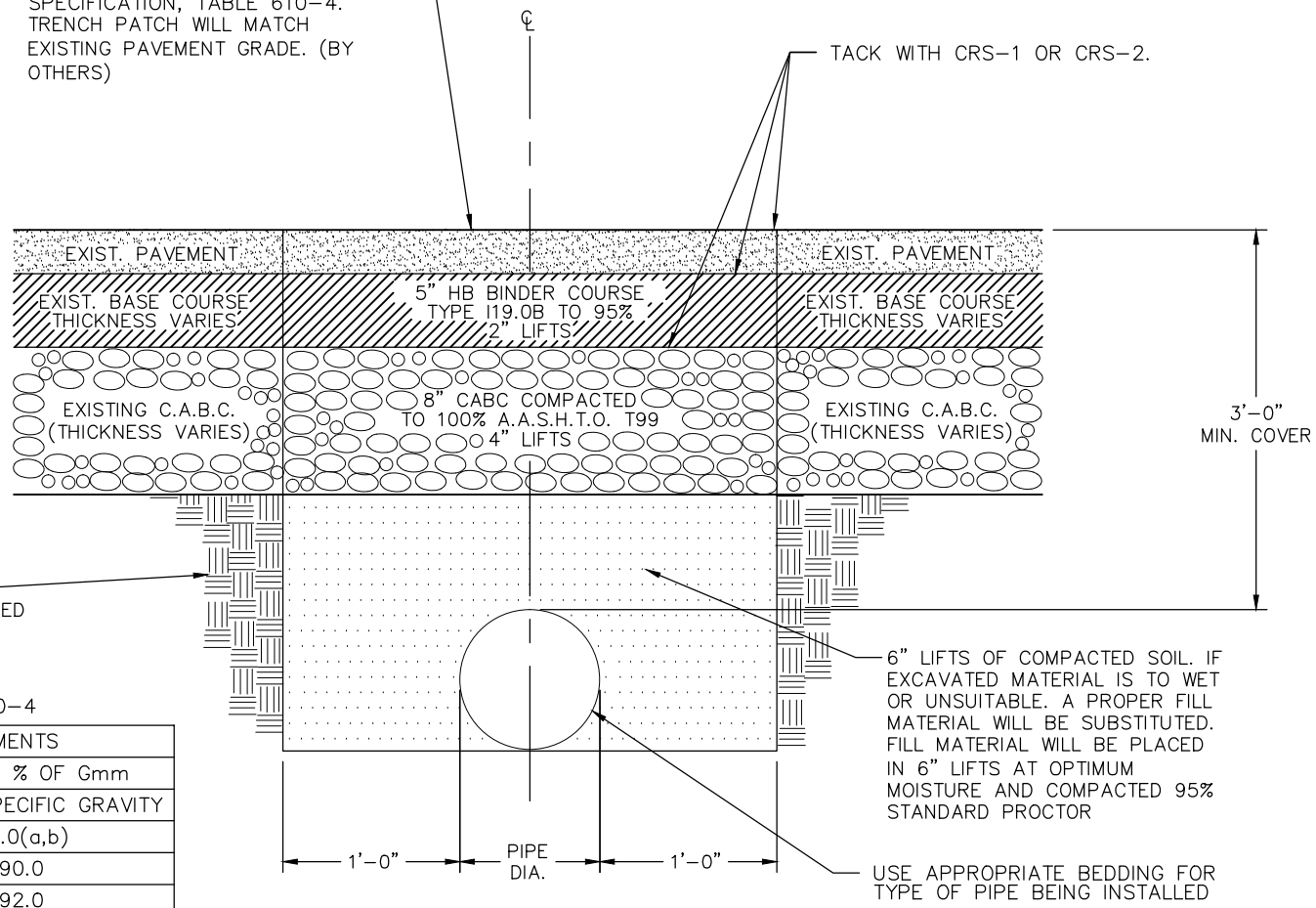

N.C.D.O.T. STANDARD SPECIFICATION TABLE 610-4

MINIMUM DENSITY REQUIREMENTS	
MIX TYPE	MINIMUM % OF Gmm
SUPER PAVE MIXES	MINIMUM SPECIFIC GRAVITY
S 4.75A	85.0(a,b)
SF 9.5A	90.0
S 9.5X, S 12.5X, I 19.0X, B 25.0X, B 37.5X	92.0

City of Asheville, NC

Standard Specifications and Details Manual

ROAD PAVEMENT REPAIR UTILITY TRENCH WIDTH ONLY

REVISIONS	
DATE	DESCRIPTION

STD. NO.

5.09

NOTE:
1. EDGES TO BE SAWED WITH A CONCRETE SAW TO A NEAT SQUARED EDGE BROOMED CLEAN OF DUST BEFORE TACK COAT IS APPLIED.

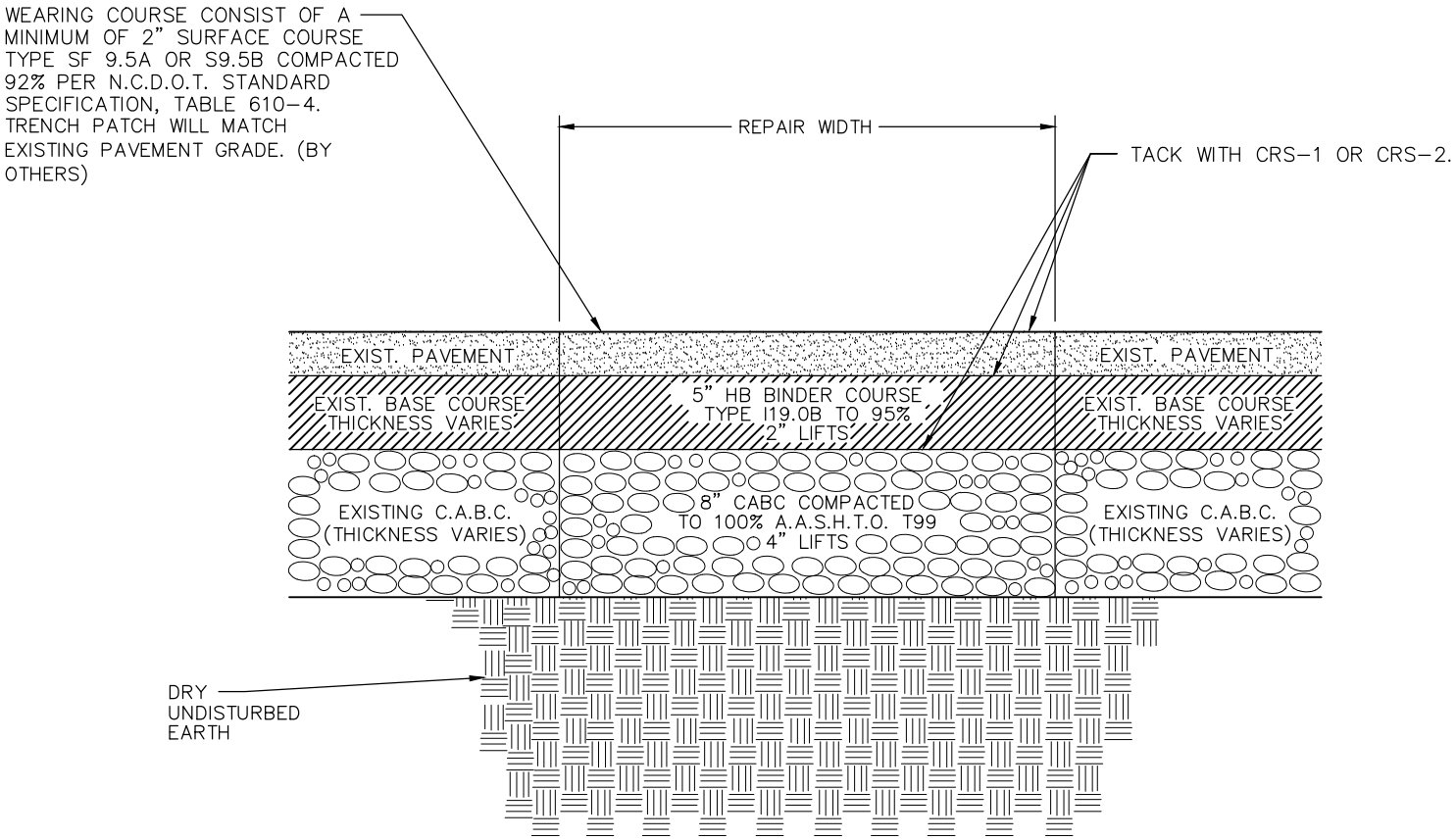

City of Asheville, NC Standard Specifications and Details Manual	ROAD PAVEMENT REPAIR	REVISIONS DATE / DESCRIPTION	STD. NO. 5.10

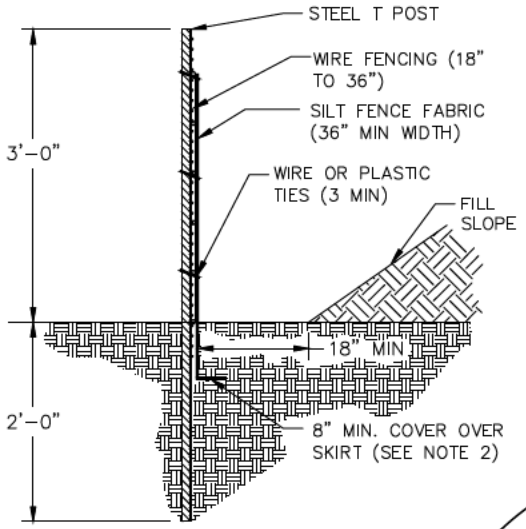

SIDE VIEW

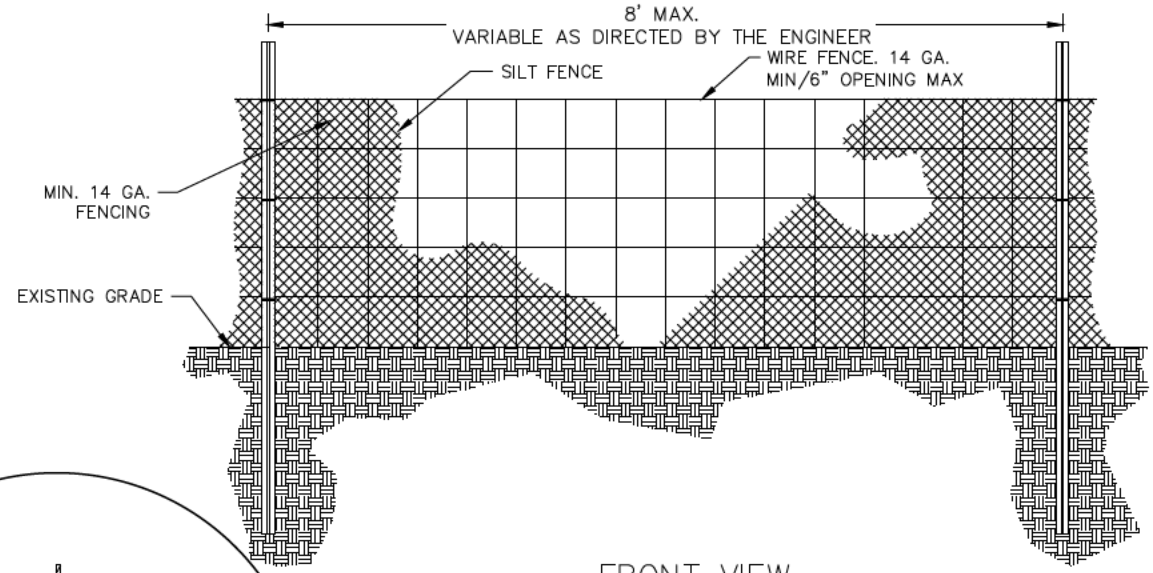

FRONT VIEW

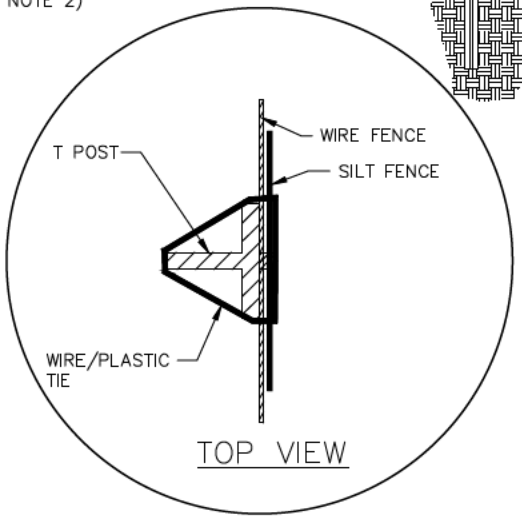

TOP VIEW

NOTES:

1. SILT FENCE MUST BE PLACED 18" (MIN) FROM TOE OF SLOPE. IT CAN NOT BE USED TO HOLD BACK FILL MATERIALS
2. BOTTOM 12 INCHES OF SILT FENCE MUST BE BURIED. PLACE IT IN A TRENCH 8" DEEP AND 4" WIDE
3. USE SILT FENCE ONLY WHEN DRAINAGE AREA DOES NOT EXCEED 1/4 ACRE AND NEVER IN AREAS OF CONCENTRATED FLOW OR IN A STREAM BED.

MAXIMUM SLOPE LENGTH AND SLOPE WHICH SEDIMENT FENCE IS APPLICABLE*

SLOPE	SLOPE LENGTH (FT)	MAXIMUM AREA (SQ FT)
<2%	100	10,000
2 TO 5%	75	7,500
5 TO 10%	50	5,000
10 TO 20%	25	2,500
>20%	15	1,500

* TABLE INFORMATION TAKEN FRON THE NORTH CAROLINA EROSION AND SEDIMENT CONTROL PLANNING AND DESIGN MANUAL, DETAIL 6.62A.

City of Asheville, NC
Standard Specifications and Details Manual

STANDARD TEMPORARY SILT FENCE

REVISIONS	
DATE	DESCRIPTION
6/9/15	MINOR GRAPHIC REP. REVISIONS

STD. NO.
7.01

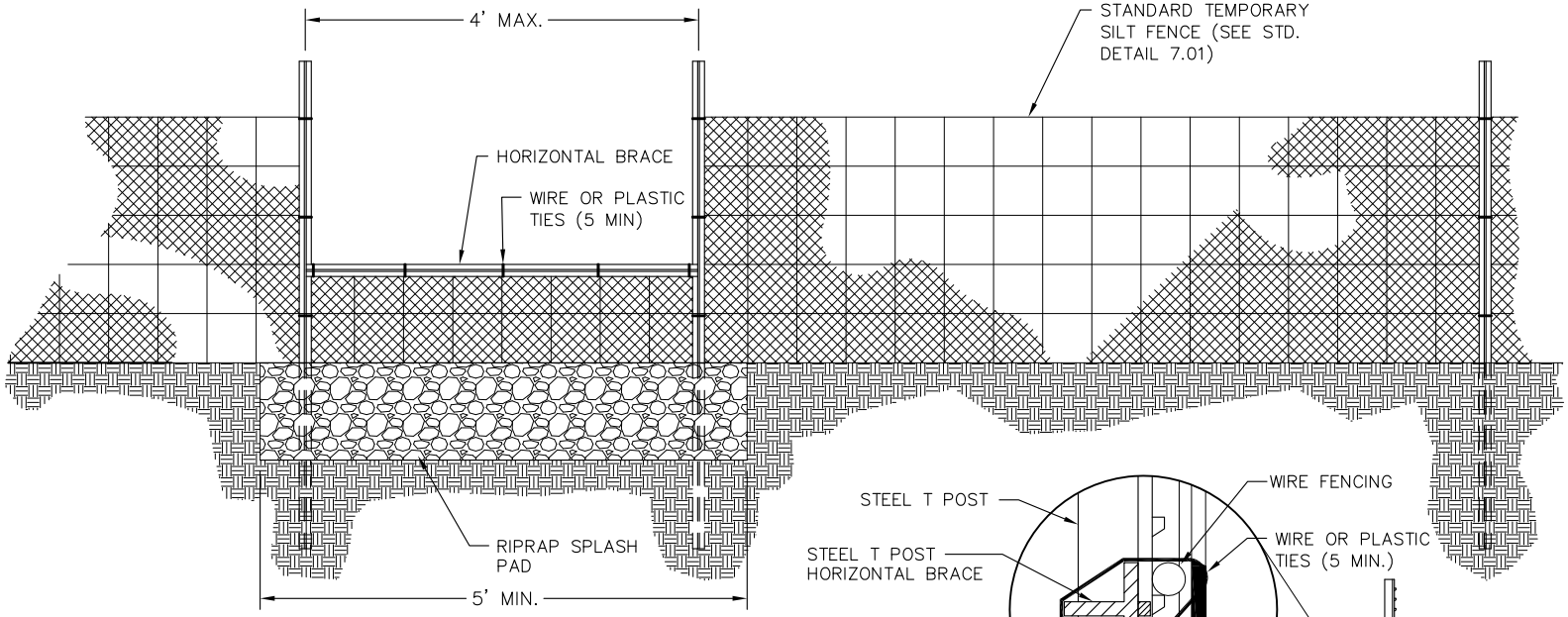

FRONT VIEW

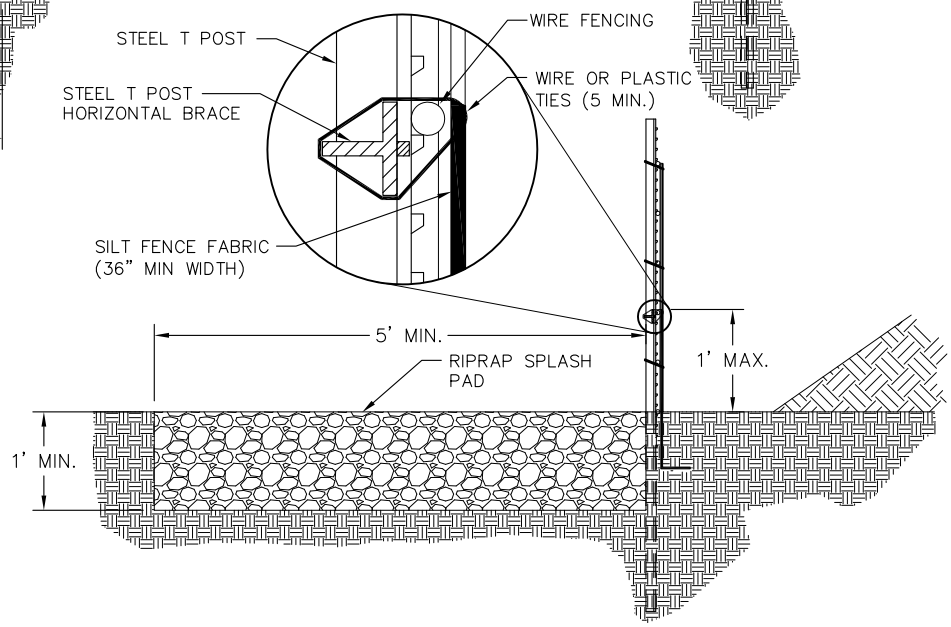

SIDE VIEW

NOTES:

1. SET FABRIC HEIGHT AT 1 FT MAXIMUM BETWEEN SUPPORT POSTS SPACED NO MORE THAN 4 FT APART.
2. SET OUTLET ELVATION SO THAT WATER DEPTH CANNOT EXCEED 1.5 IT AT THE LOWEST POINT ALONG THE FENCELINE.
3. INSTALL A HORIZONTAL BRACE BETWEEN THE SUPPORT POSTS TO SERVE AS AN OVERFLOW WEIR AND TO SUPPORT TOP OF FABRIC.
4. PROVIDE A RIPRAP SPLASH PAD AS SHOWN ABOVE. EXCAVATE FOUNDA110N FOR THE SPLASH PAD A MINIMUM 5 FT WIDE, 1FT DEEP, AND 5 FT LONG ON LEVEL GRADE. THE FINISHED SURFACE OF THE RIPRAP SHOULD BLEND WITH SURROUNDING AREA, ALLOWING NO OVERALL THE AREA AROUND THE PAD MUST BE STABLE.
5. DIG A V–TRENCH IN THE LINE OF THE FENCE AS SHOWN ABOVE.
6. AVOID JOINTS, PARTICULARLY AT LOW POINTS IN THE FENCE LINE. WHERE JOINTS ARE NECESSARY, FASTEN FABRIC SECURELY TO SUPPORT POSTS AND OVERLAP TO THE NEXT POST.
7. TO REDUCE MAINTENANCE, EXCAVATE A SHALLOW SEDIMENT STORAGE AREA ON UPSLOPE SIDE OF FENCE WHERE SEDIMENTATION IS EXPECTED. PROVIDE GOOD ACCESS TO DEPOSITION AREAS FOR CLEANOUT AND MAINTENANCE.

City of Asheville, NC Standard Specifications and Details Manual	STANDARD TEMPORARY SILT FENCE WITH REINFORCED STABILIZED OUTLET	REVISIONS DATE / DESCRIPTION	STD. NO. 7.01A

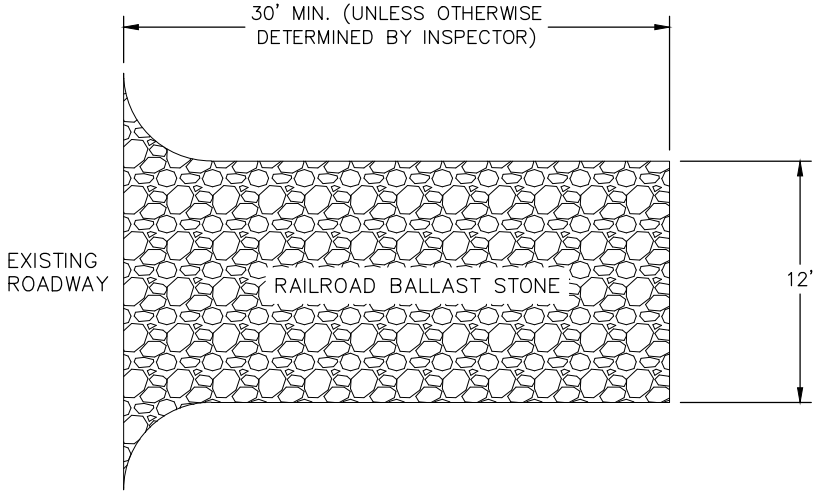

PLAN

NOTES:
1. THIS ENTRANCE APPLIES ONLY TO ENTRANCES OF INDIVIDUAL SINGLE FAMILY RESIDENTIAL UNITS.
1. REFER TO DWG. STD. No. 3.15–STANDARD DRIVEWAY APRON.
2. REFER TO DWG. STD. No.3.12–STANDARD METHOD OF REMOVING EXISTING CURB.
3. FABRIC MAY BE ADDED UNDER THE STONE WHICH WOULD ADD TOTAL LIFE TO THE CONSTRUCTION ENTRANCE.

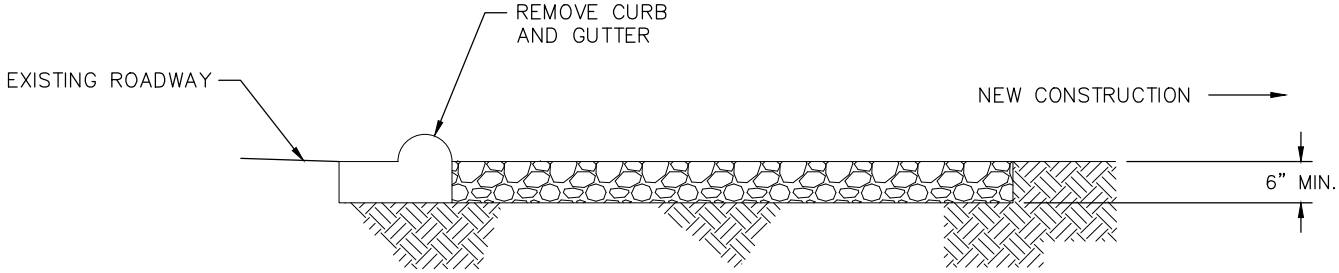

CROSS SECTION

City of Asheville, NC Standard Specifications and Details Manual	RESIDENTIAL CONSTRUCTION ENTRANCE	REVISIONS DATE / DESCRIPTION	STD. NO. 7.02

NOTES:
1. THIS ENTRANCE APPLIES ONLY TO ENTRANCES FOR COMMERCIAL SITES.
2. FIRST 5' MUST DRAIN AWAY FROM THE STREET (MIN ¼" PER 1' FALL)
3. FLOW FROM PROJECT SHALL NOT ENTER THE PUBLIC STREET.
4. FABRIC MAY BE ADDED UNDER THE STONE WHICH WOULD ADD TOTAL LIFE TO THE CONSTRUCTION ENTRANCE.

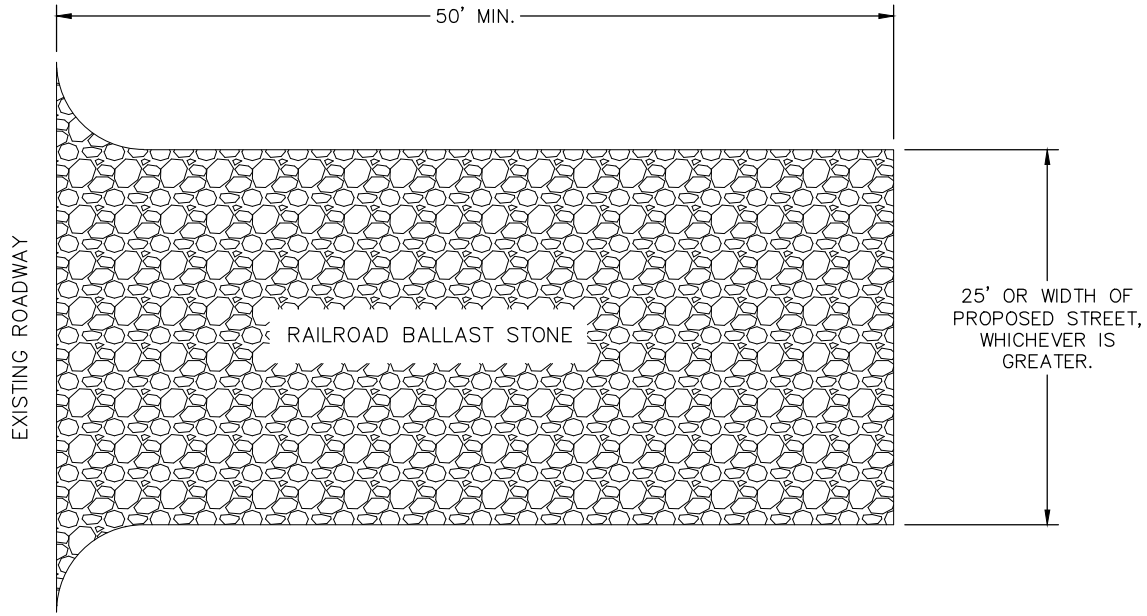

PLAN

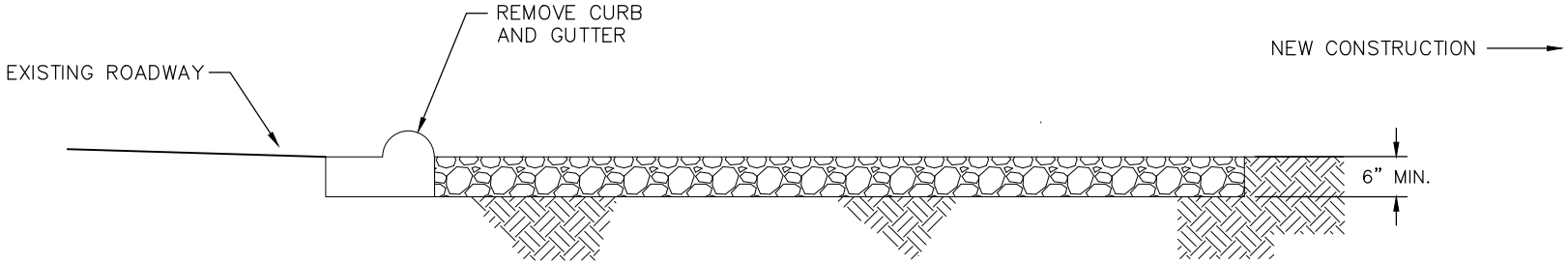

CROSS SECTION

City of Asheville, NC Standard Specifications and Details Manual	COMMERCIAL CONSTRUCTION ENTRANCE	REVISIONS DATE / DESCRIPTION	STD. NO. 7.03

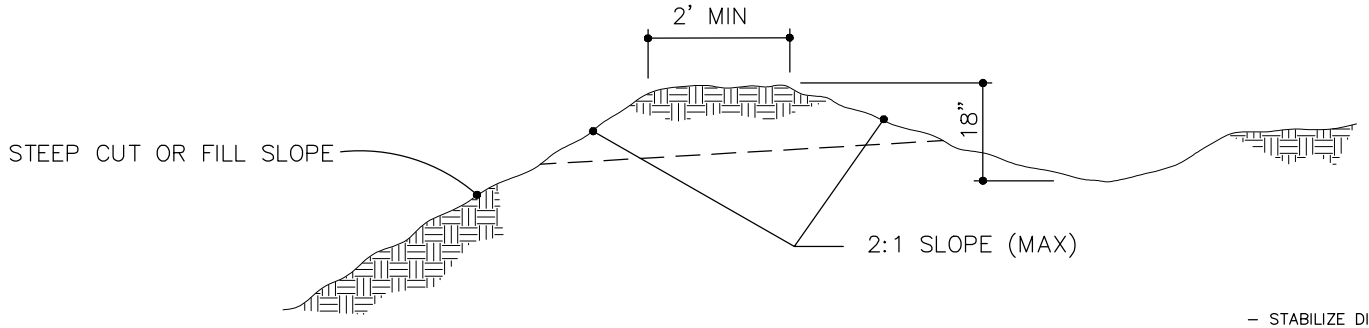

CROSS SECTION

– STABILIZE DIVERSION DITCH WITH TEMPORARY SEEDING AND EROSION CONTROL NETTING

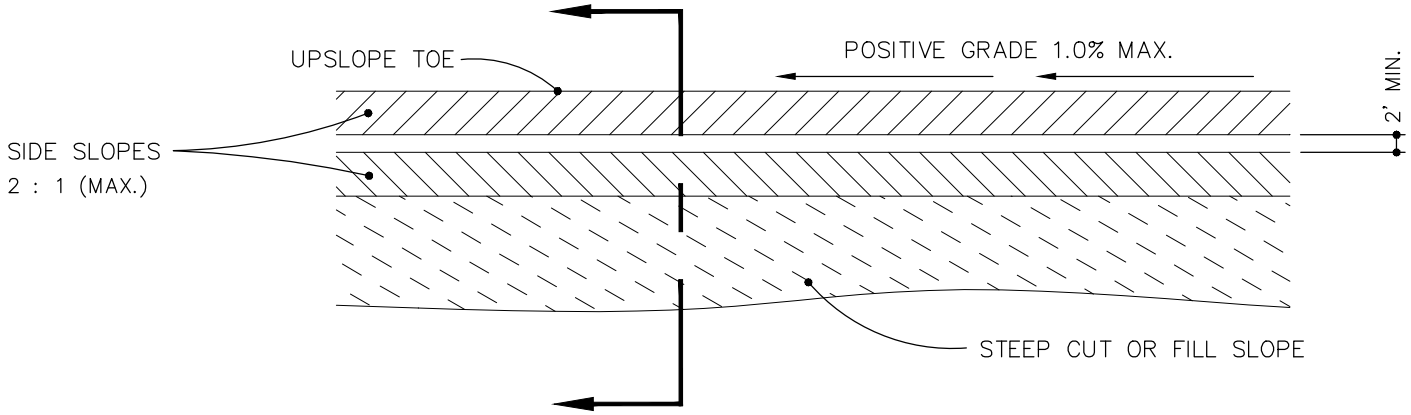

PLAN VIEW

City of Asheville, NC Standard Specifications and Details Manual	DIVERSION DITCH	REVISIONS DATE	STD. NO. 7.04

NOTES:

1. WATTLES SHALL BE FILLED WITH STRAW OR OTHER APPROVED MATERIAL
2. POLYACRYLAMIDE (PAM) MAY BE APPLIED AT A RATE APPROVED BY DWQ AQUATIC TOXICOLOGY UNIT.
3. SPACING FOR WATTLES SHALL BE DETERMINED BY THE SITE ENGINEER.
4. WATTLES MAY BE USED FOR PROTECTION OF CATCH BASINS AND DROP INLETS WITH APPROVAL BY THE STORMWATER SERVICES MANAGER OR DESIGNEE.

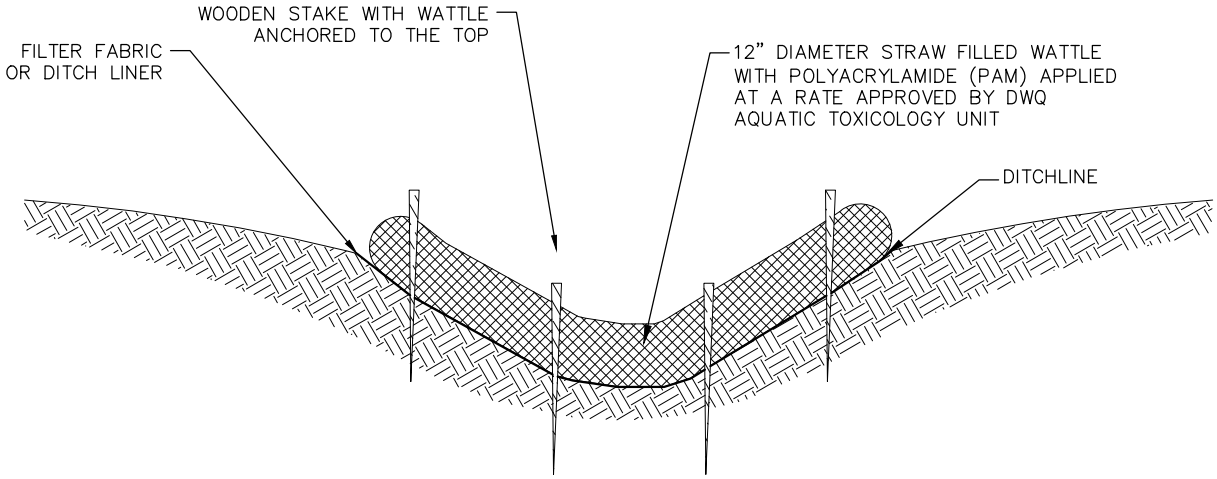

PROFILE VIEW

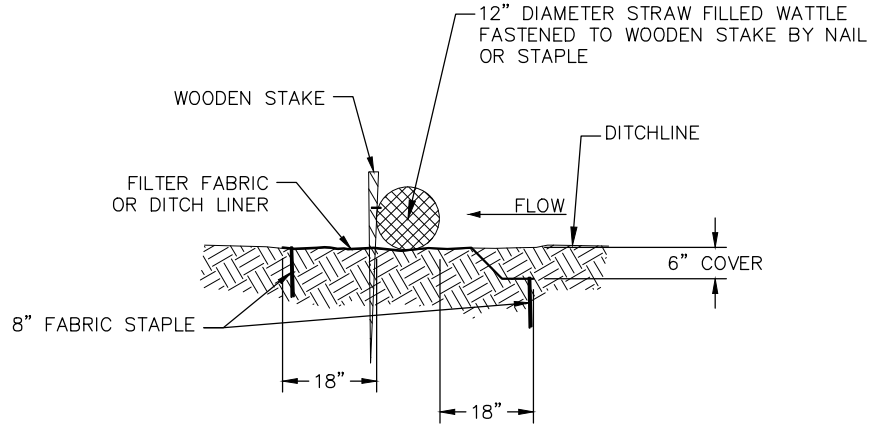

City of Asheville, NC Standard Specifications and Details Manual	WATTLE DETAIL	REVISIONS DATE	STD. NO. 7.05

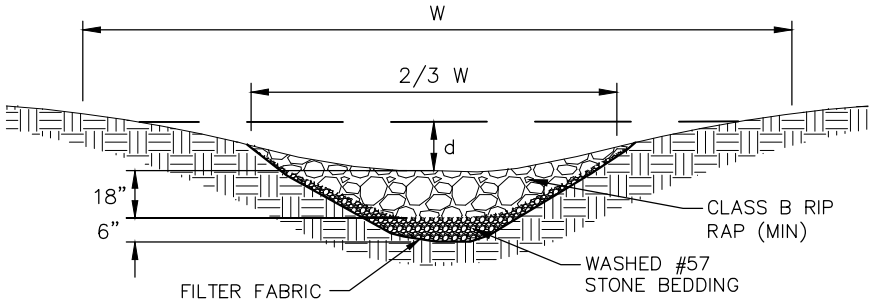

PARABOLIC–SHAPED WATERWAY WITH STONE CENTER DRAIN

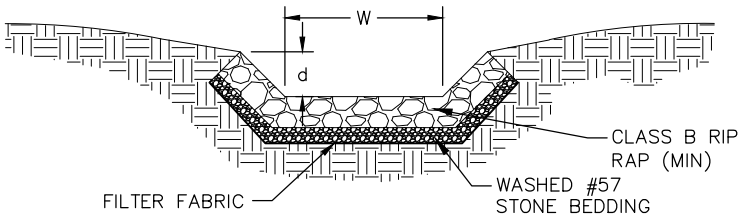

TRAPEZOIDAL

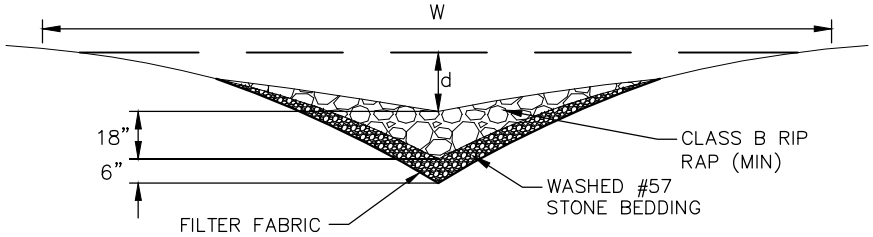

V–SHAPED WATERWAY WITH STONE CENTER DRAIN

NOTE:
TO BE USED WHERE EXCESSIVE STORMWATER VELOCITIES PROHIBIT VEGETATIVE LININGS. SIZE OF STONE MUST BE DETERMINED BY APPROPRIATE DESIGN PROCEDURE. DIMENSIONS FOR d & W VARIES ACCORDING TO DESIGN. (NC DENR MANUAL, DETAIL 6.62A)

City of Asheville, NC Standard Specifications and Details Manual	RIP RAP LINED CHANNELS	REVISIONS DATE / DESCRIPTION	STD. NO. 7.06

SIDE VIEW

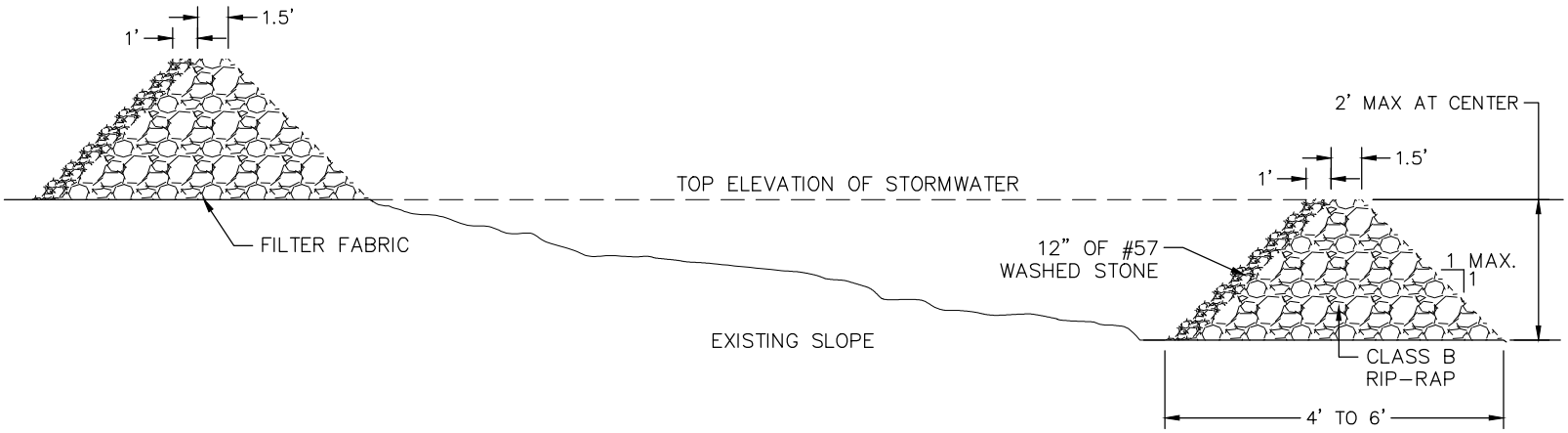

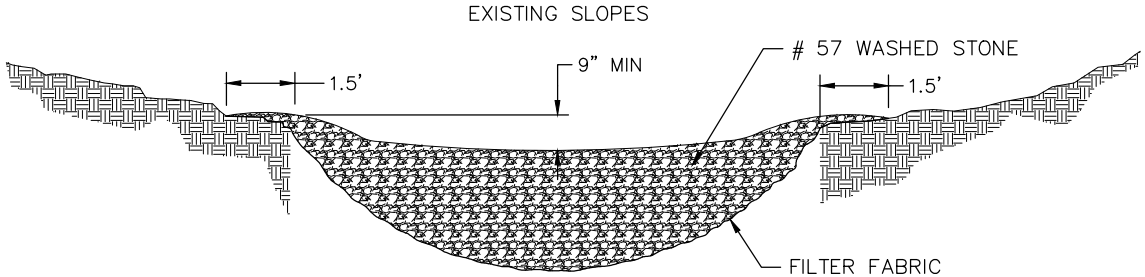

FRONT VIEW

NOTE:
HEIGHT & WIDTH DETERMINED BY EXISTING TOPOGRAPHY AND SEDIMENT STORAGE REQUIRED.

City of Asheville, NC Standard Specifications and Details Manual	CHECK DAM	REVISIONS DATE / DESCRIPTION	STD. NO. 7.07

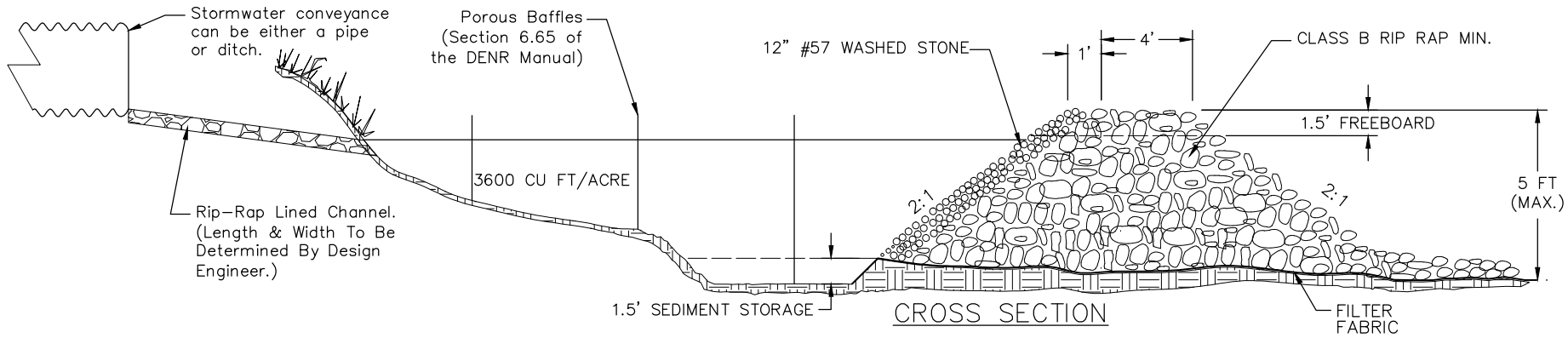

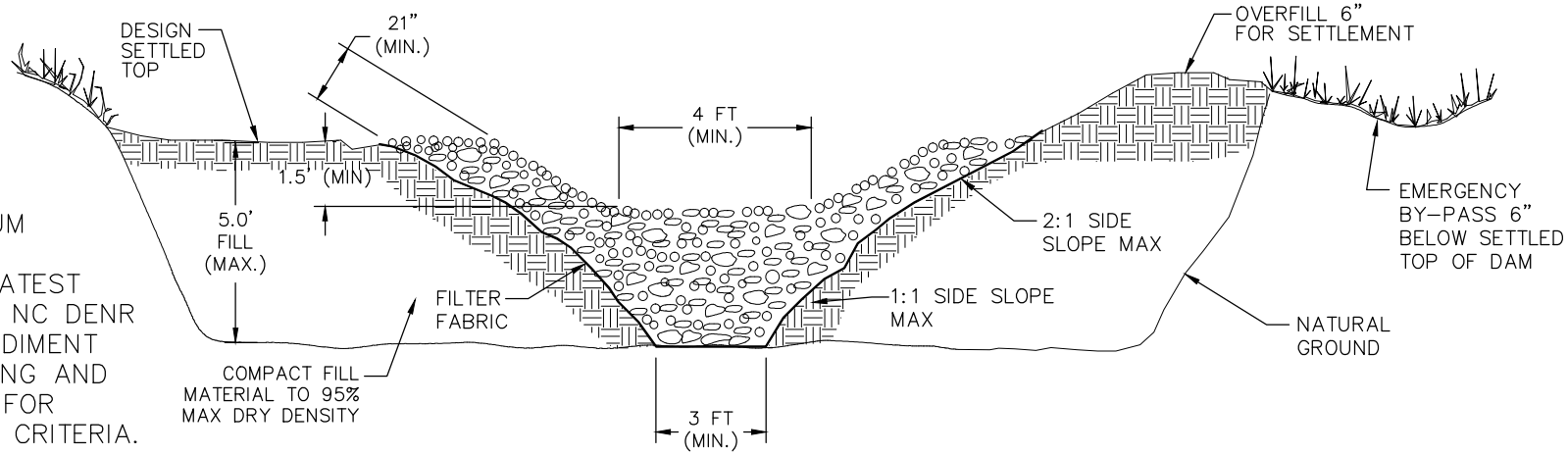

NOTES:

1. 5 ACRES MAXIMUM DRAINAGE AREA
2. REFER TO THE LATEST VERSION OF THE NC DENR EROSION AND SEDIMENT CONTROL PLANNING AND DESIGN MANUAL FOR FURTHER DESIGN CRITERIA.

MAINTENANCE:

1. INSPECT ONCE A WEEK AND AFTER EACH SIGNIFICANT (½ INCH OR GREATER) RAINFALL AND MAKE REPAIRS IMMEDIATELY.
2. REMOVE SEDIMENT AND RESTORE THE TRAP TO ITS ORIGINAL DIMENSIONS WHEN SEDIMENT HAS ACCUMULATED TO ½ THE DESIGN DEPTH OF THE TRAP.
3. PLACE SEDIMENT IN A DESIGNATED (PERMITTED) DISPOSAL AREA AND REPLACE GRAVEL FACINGS THAT HAVE BEEN IMPAIRED BY SEDIMENT.
4. ANY RIPRAP DISPLACED FROM THE SPILLWAY MUST BE REPLACED IMMEDIATELY.
5. CHECK THE TRAP FOR DAMAGE CAUSE BY EROSION OR PIPING.
6. PERIODICALLY CHECK THE SPILLWAY TO INSURE IT IS MINIMUM 1½ FEET BELOW THE EMBANKMENT.

DESIGN OF SPILLWAY

DRAINAGE AREA (ACRES)	WEIR LENGTH* (FT)
1	4.0
2	6.0
3	8.0
4	10.0
5	12.0

* DIMENSIONS SHOWN ARE MINIMUM

City of Asheville, NC

Standard Specifications and Details Manual

TEMPORARY SEDIMENT TRAP

REVISIONS	
DATE	DESCRIPTION

STD. NO.

7.08

NOTE: FOR 10 ACRE MAXIMUM DRAINAGE AREA

MINIMUM L/W RATIO:	2:1
MAXIMUM L/W RATIO:	6:1
MINIMUM DEPTH:	2 FEET
MAX DAM HEIGHT:	5 FEET
MIN DEWATERING TIME:	48 HOURS
STORAGE VOLUME:	1800 CF/ACRE

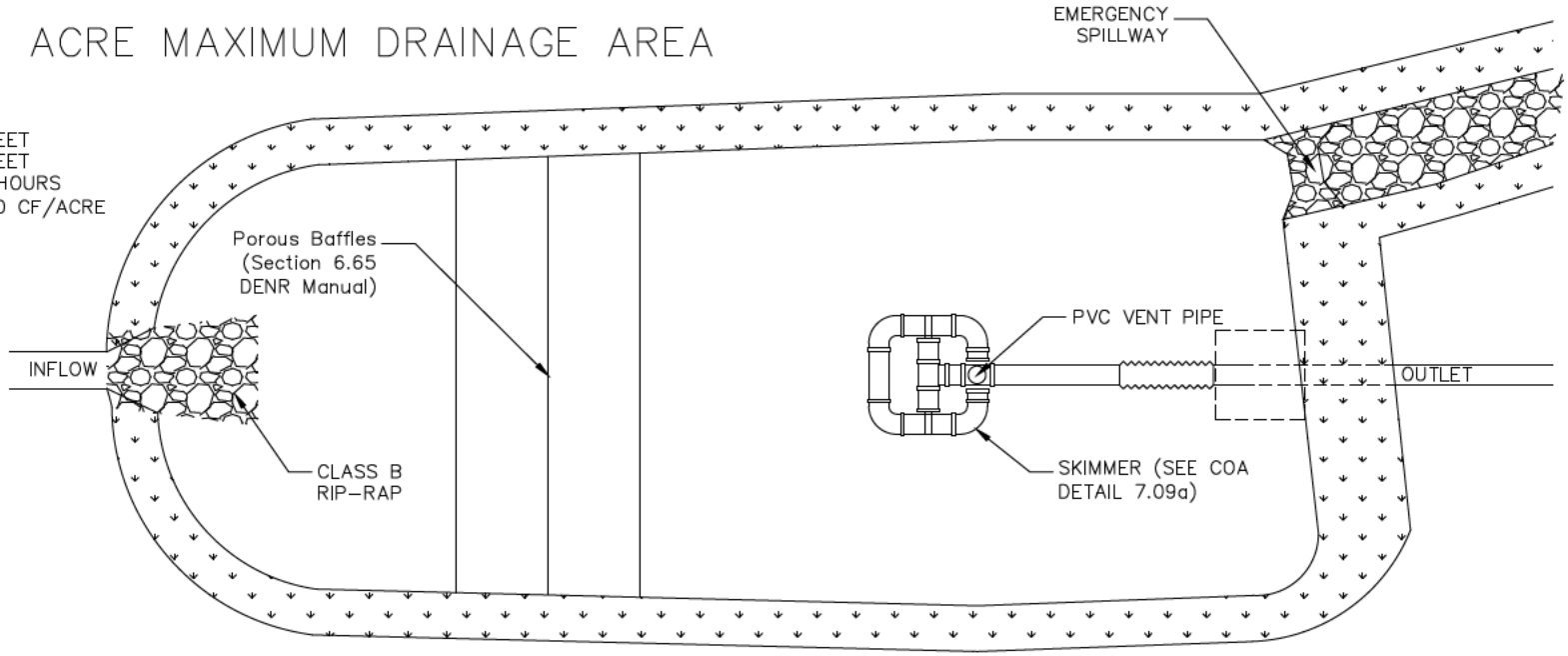

PLAN VIEW

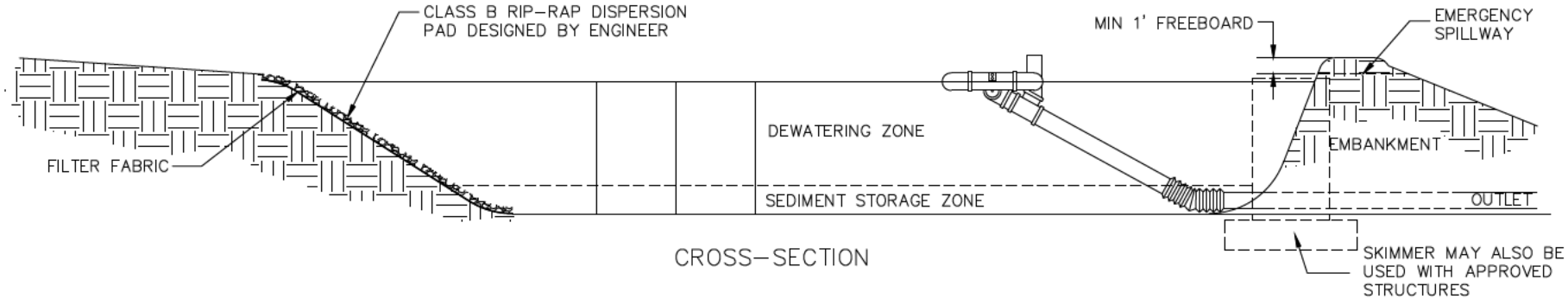

CROSS-SECTION

City of Asheville, NC

Standard Specifications and Details Manual

SKIMMER SEDIMENT BASIN

REVISIONS	
DATE	DESCRIPTION
6/9/15	REV. MIN. DEWATERING T ME

STD. NO. 7.09

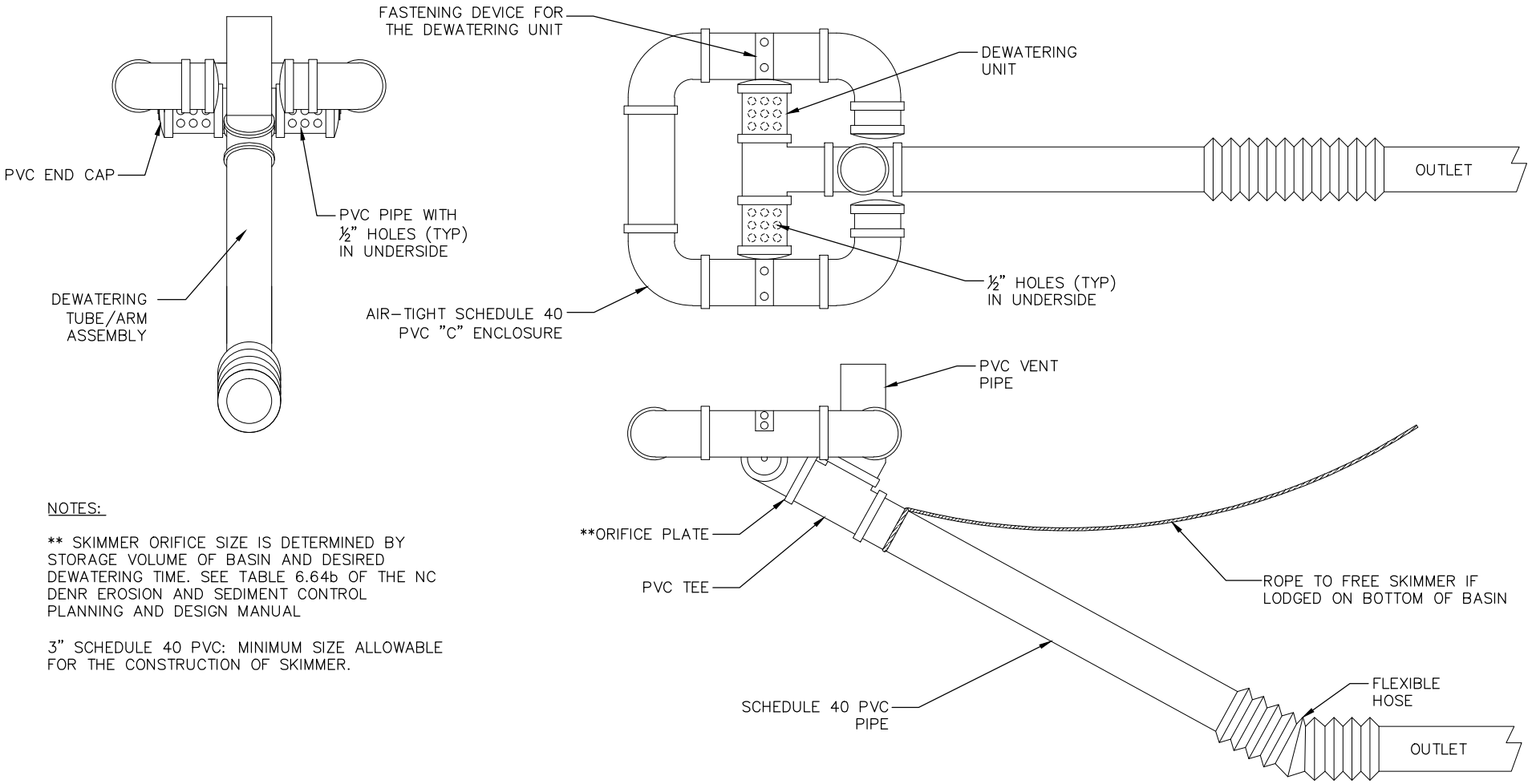

NOTES:

** SKIMMER ORIFICE SIZE IS DETERMINED BY STORAGE VOLUME OF BASIN AND DESIRED DEWATERING TIME. SEE TABLE 6.64b OF THE NC DENR EROSION AND SEDIMENT CONTROL PLANNING AND DESIGN MANUAL

3" SCHEDULE 40 PVC: MINIMUM SIZE ALLOWABLE FOR THE CONSTRUCTION OF SKIMMER.

City of Asheville, NC Standard Specifications and Details Manual	SKIMMER DETAIL	REVISIONS DATE / DESCRIPTION	STD. No. 7.09A

NOTE:
GRAVEL & RIP RAP FILTER BERM BASIN DETAIL IS DESIGNED TO PROTECT EXISTING PIPE INVERTS THAT DRAIN 10 ACRES OR LESS.

SECTION THRU BASIN, FILTER AND CULVERT PIPE

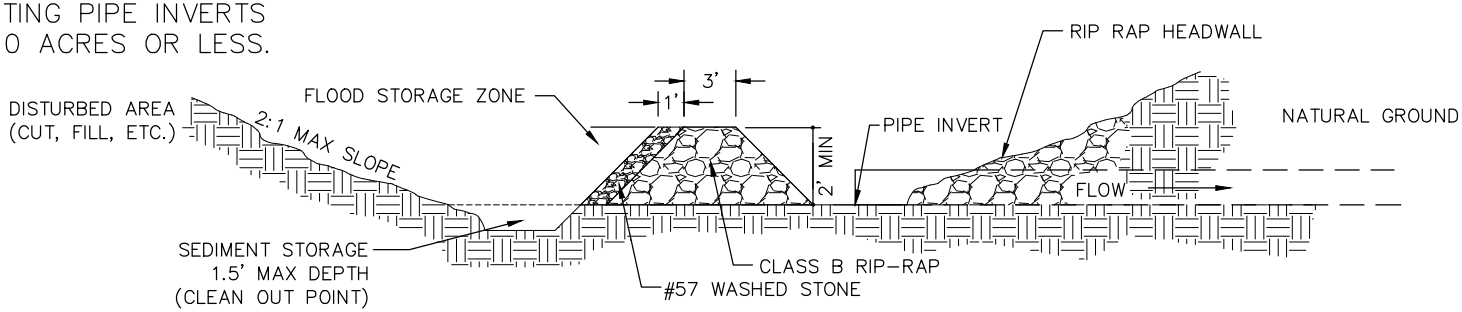

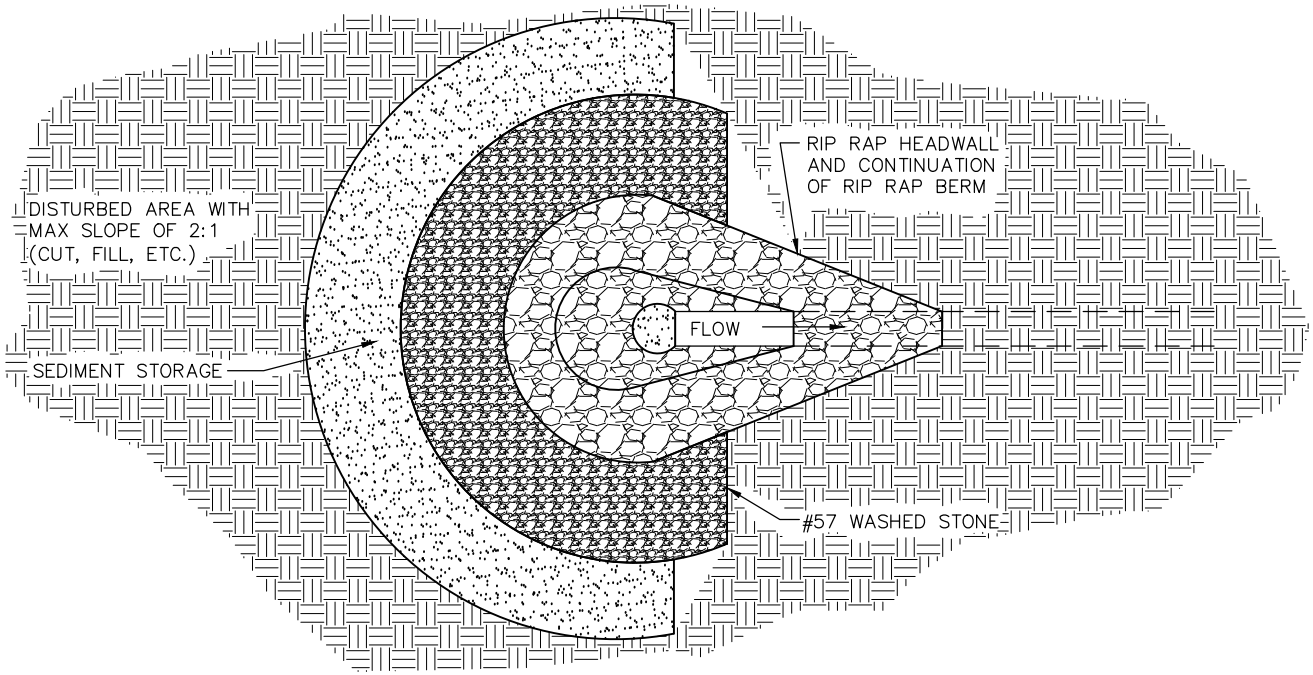

City of Asheville, NC Standard Specifications and Details Manual	**GRAVEL & RIP RAP PIPE INLET PROTECTION**	REVISIONS DATE / DESCRIPTION	STD. NO. **7.10**

NOTES:

1. SILT FENCE IS NOT ACCEPTABLE IN PLACE OF HARDWARE CLOTH.
2. ONLY STEEL T-POST ARE ACCEPTABLE.
3. #57 WASHED STONE MUST BE A MIN 6" ABOVE THE TOP OF THE CATCH BASIN.
4. TEMPORARY SEDIMENT POOL MUST BE 1' MINIMUM AND 2' MAXIMUM DEPTH

TOP ELEVATION

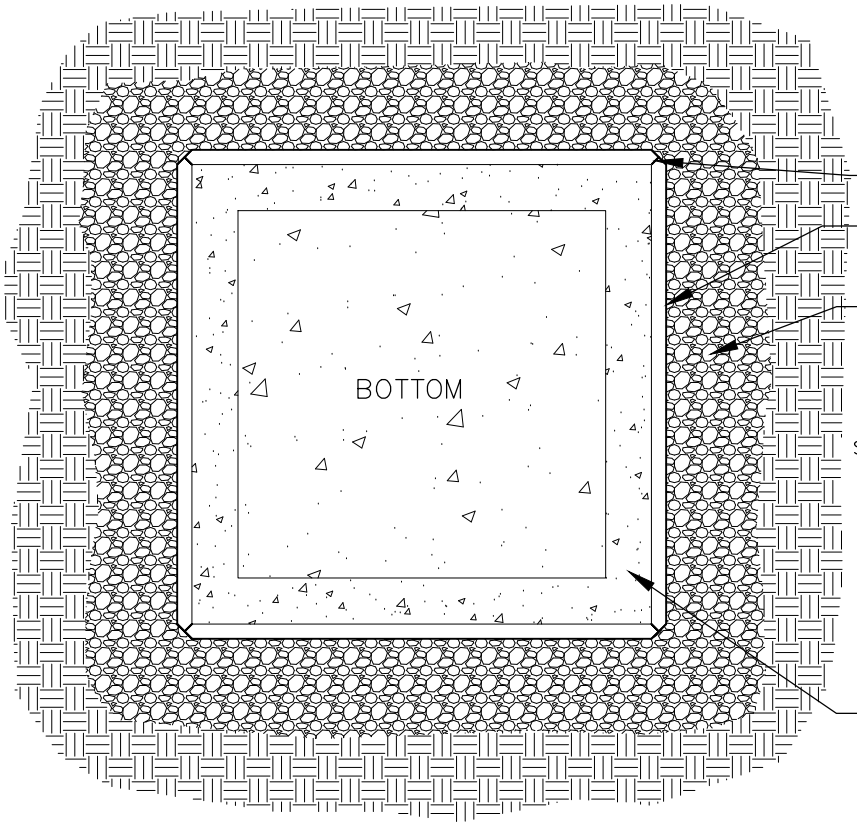

SIDE ELEVATION

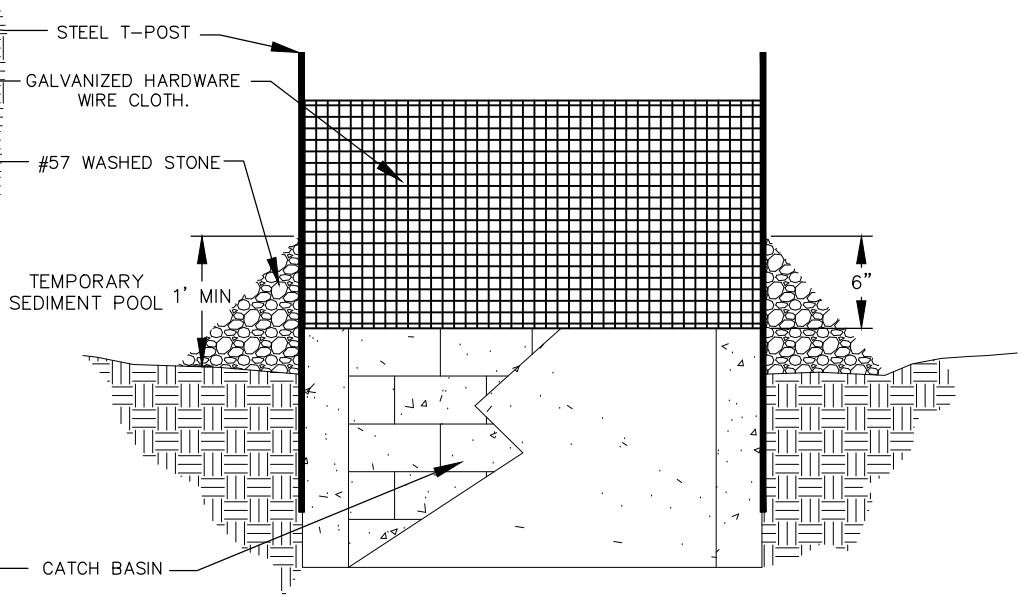

City of Asheville, NC Standard Specifications and Details Manual	STANDARD CATCH BASIN INLET PROTECTION	REVISIONS DATE / DESCRIPTION	STD. NO. 7.11

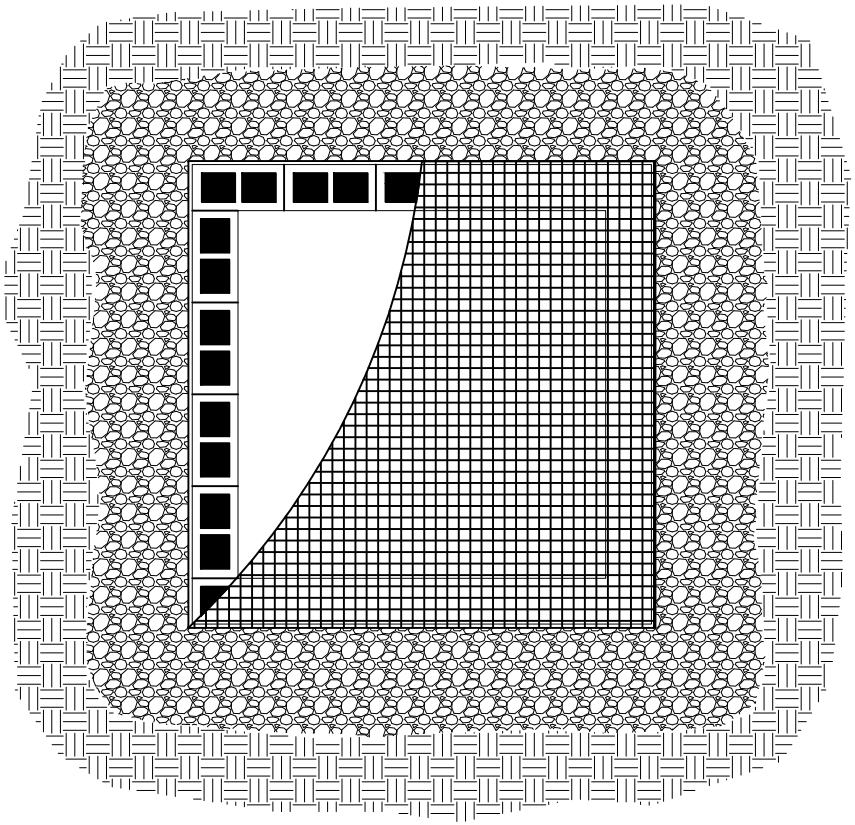

CONSTRUCTION SPECIFICATIONS

1. LAY ONE BLOCK ON EACH SIDE OF THE STRUCTURE ON ITS SIDE IN THE BOTTOM ROW TO ALLOW POOL DRAINAGE. THE FOUNDATION SHOULD BE EXCAVATED AT LEAST 2 INCHES BELOW THE CREST OF THE STORM DRAIN. PLACE THE BOTTOM ROW OF BLOCKS AGAINST THE EDGE OF THE STORM DRAIN FOR LATERAL SUPPORT AND TO AVOID WASHOUTS WHEN OVERFLOW OCCURS. IF NEEDED, GIVE LATERAL SUPPORT TO SUBSEQUENT ROWS BY PLACING 2 X 4 WOOD STUDS THROUGH BLOCK OPENINGS.
2. CAREFULLY FIT HARDWARE CLOTH OR COMPARABLE WIRE MESH WITH 1/2–INCH OPENINGS OVER ALL BLOCK OPENINGS TO HOLD GRAVEL IN PLACE.
3. USE CLEAN GRAVEL, 3/4– TO 1/2–INCH IN DIAMETER, PLACED 2 INCHES BELOW THE TOP OF THE BLOCK ON A 2:1 SLOPE OR FLATTER AND SMOOTH IT TO AN EVEN GRADE. DOT #57 WASHED STONE IS RECOMMENDED.

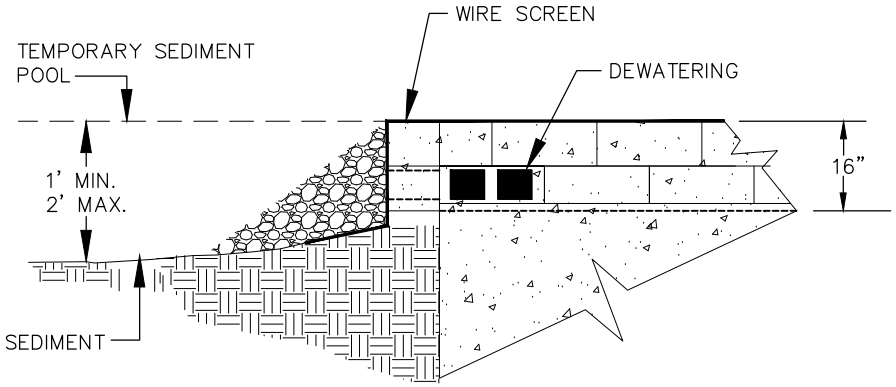

City of Asheville, NC Standard Specifications and Details Manual	BLOCK AND GRAVEL INLET PROTECTION	REVISIONS DATE / DESCRIPTION	STD. NO. 7.11A

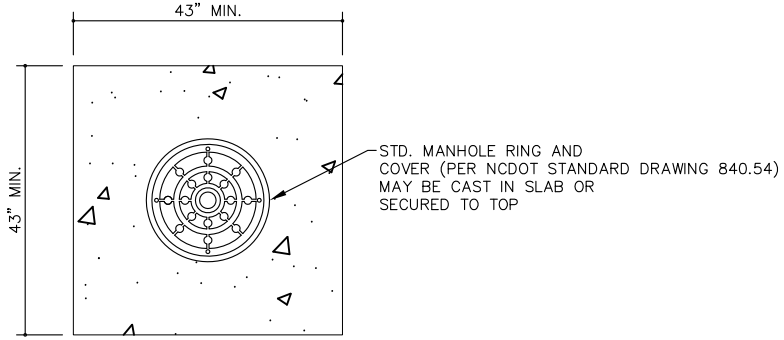

CONCRETE SLAB

NOTES:

STANDARD STEPS REQUIRED @ 16" O.C.
WHERE DEPTH EXCEEDS 4'.

USE MIN. 4000 P.S.I. CONC. MIX.

INSIDE DIMENSION FOR 24" PIPE
AND GREATER USE PIPE DIA. PLUS 12".

ALL JUNCTION BOXES SHALL HAVE A PAVED INVERT WITH A MAXIMUM
5:1 SLOPE EXTENDING FROM THE PIPE INVERT TO THE STRUCTURE WALL.

ALL STRUCTURES 4' OR DEEPER SHALL HAVE ACCESS STEPS. STEPS
SHALL BE INSTALLED 16" ON CENTER.

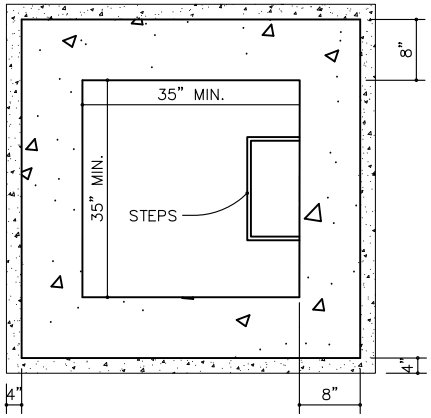

PLAN

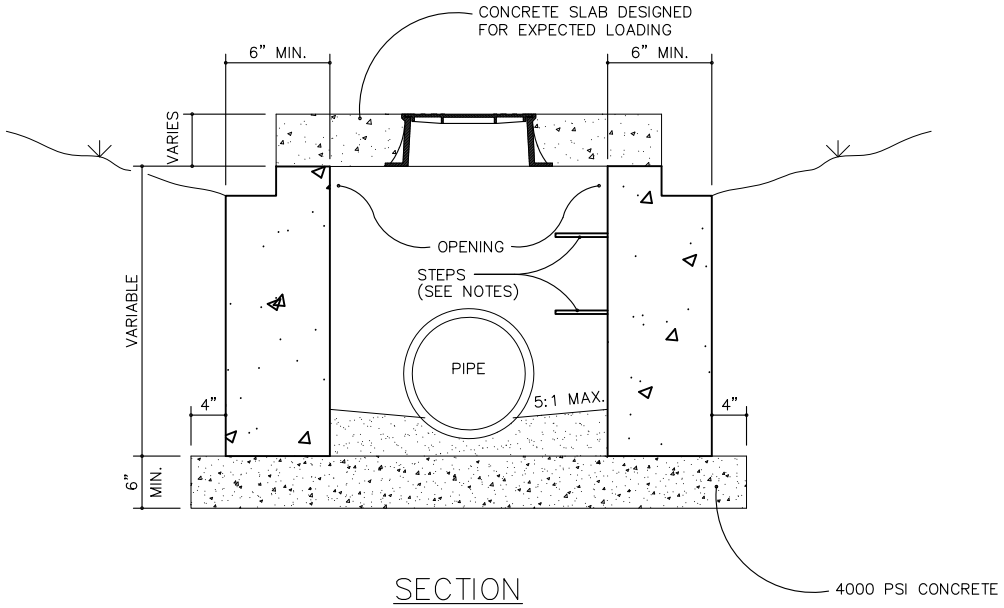

SECTION

City of Asheville, NC

Standard Specifications
and Details Manual

STANDARD YARD INLET WITH CONCRETE SLAB

REVISIONS	
DATE	DESCRIPTION
6/9/15	REV. DIMENSION
6/9/15	REV. 12" O.C. TO 16" IN NOTES

STD. NO.

8.01

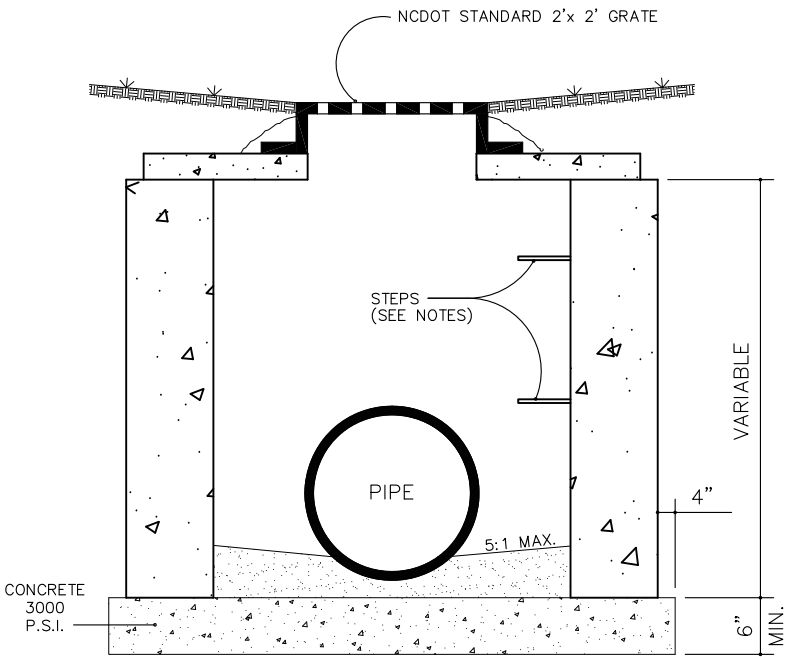

SECTION

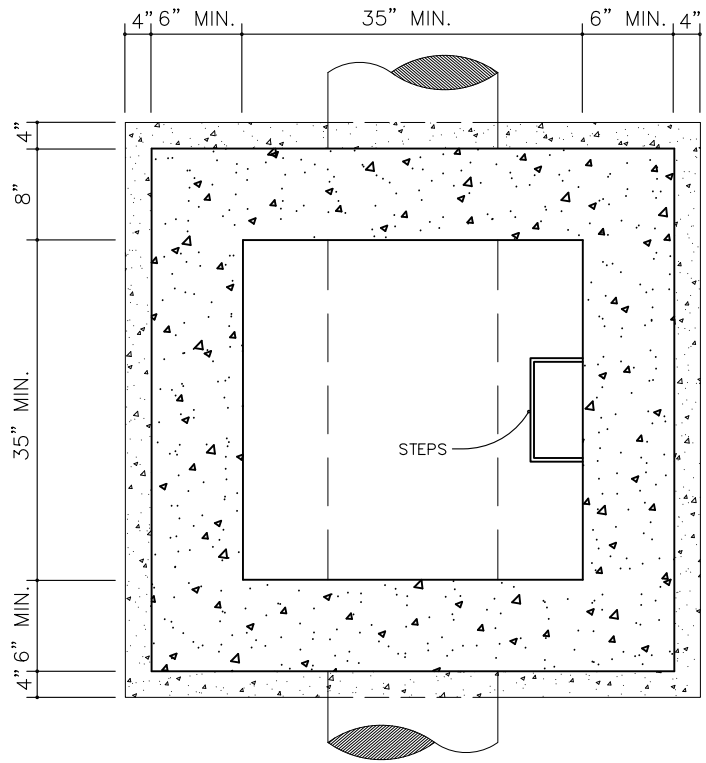

PLAN

NOTES:

FOR 24" R.C.P. AND LARGER USE PIPE DIA. PLUS 12" FOR MINIMUM INSIDE DIMENSION.

GRATED INLETS SHALL NOT BE USED WITHIN TRAVEL AREAS.

STANDARD STEPS REQUIRED @ 16" O.C. WHERE DEPTH EXCEEDS 4'.

ALL JUNCTION BOXES SHALL HAVE A PAVED INVERT WITH A MAXIMUM 5:1 SLOPE EXTENDING FROM THE PIPE INVERT TO THE STRUCTURE WALL.

USE MIN. 4000 P.S.I. CONC. MIX.

ALL STRUCTURES 4' OR DEEPER SHALL HAVE ACCESS STEPS. STEPS SHALL BE INSTALLED 16" ON CENTER.

City of Asheville, NC

Standard Specifications and Details Manual

STANDARD YARD INLET WITH GRATE AND FRAME

REVISIONS	
DATE	DESCRIPTION
6/9/15	REV. DIMENSION
6/9/15	REV. 12" O.C. TO 16" IN NOTES

STD. NO.

8.02

SHALLOW TYPE

(5 FEET OR LESS IN DEPTH)

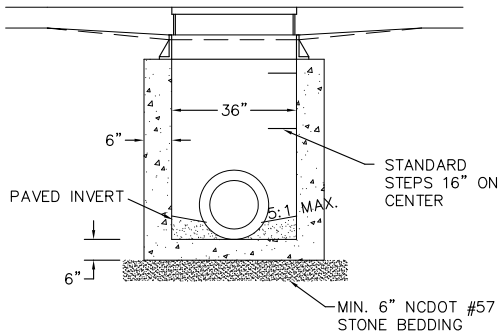

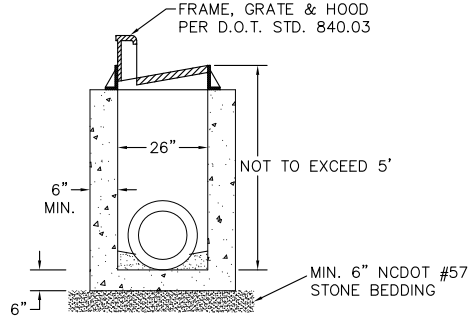

NOTE:

1. CONCRETE SHALL BE 4000 PSI MIN. FOR ALL PRECAST CONCRETE CATCH BASINS.
2. PRECAST CONCRETE STRUCTURES MAY ONLY BE INSTALLED TO DEPTHS CERTIFIED AS ACCEPTABLE BY THE MANUFACTURER.
3. "WAFFLE" (KNOCK OUT) BOXES ARE ACCEPTABLE FOR SHALLOW TYPE CATCH BASINS WITH MAXIMUM 30 INCH DIA. PIPE ALLOWED.
4. ALL STRUCTURES 4' OR DEEPER SHALL HAVE ACCESS STEPS. STEPS SHALL BE INSTALLED 16" ON CENTER.
5. EACH DRAINAGE STRUCTURE SHALL HAVE A PAVED INVERT WITH A MAXIMUM 5:1 SLOPE FROM THE INVERT OF THE PIPE TO THE WALL OF THE STRUCTURE.
6. APPLY NON-SHRINK AROUND PIPE.
7. HORIZONTAL, RISER, AND BOXES MUST BE SEALED WITH BUYTL RUBBER JOINTS.

INTERMEDIATE TYPE (4'X4')

(5 FEET TO 20 FEET IN DEPTH)

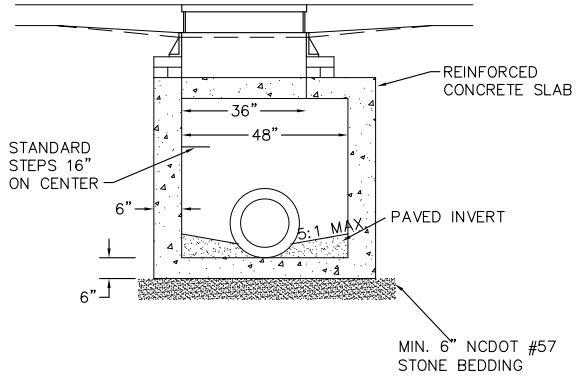

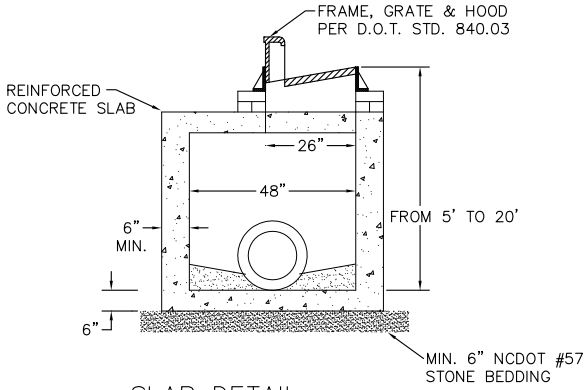

SLAB DETAIL

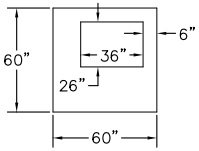

SLAB THICKNESS AND REINFORCEMENT FOR SOIL AND TRAFFIC LOADING BY AN ENGINEER

DEEP TYPE (5'X5')

(OVER 20 FEET IN DEPTH)

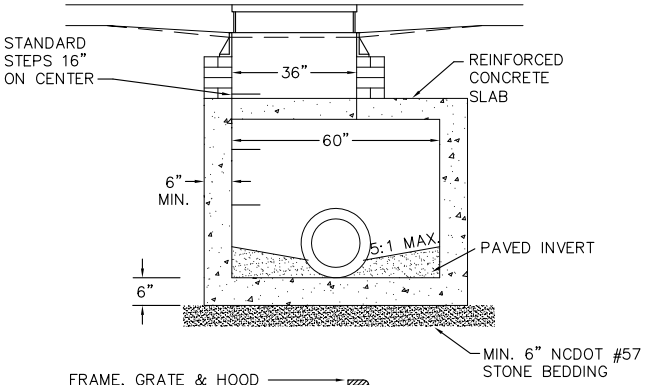

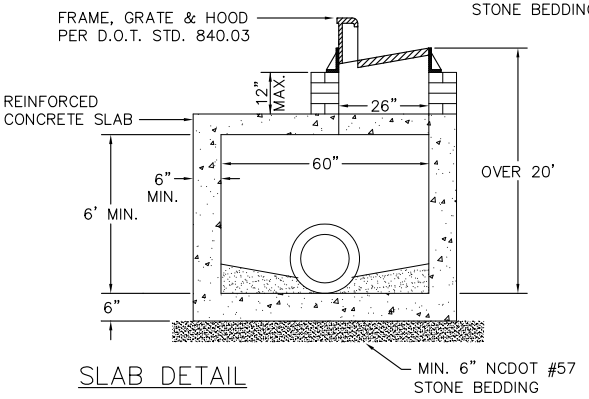

SLAB DETAIL

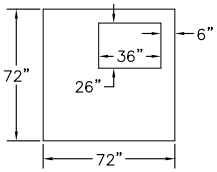

SLAB THICKNESS AND REINFORCEMENT FOR SOIL AND TRAFFIC LOADING BY AN ENGINEER

City of Asheville, NC

Standard Specifications and Details Manual

PRECAST CONCRETE CATCH BASIN

REVISIONS	
DATE	DESCRIPTION
6/9/15	REV. 12" O.C. TO 16" IN DETAIL

STD. NO.

8.03

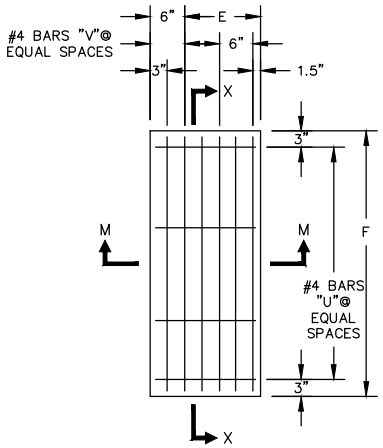

PLAN OF TOP SLAB

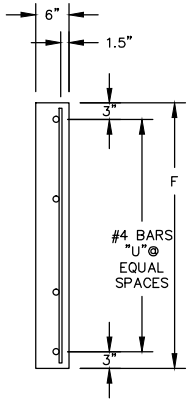

SECTION S–S

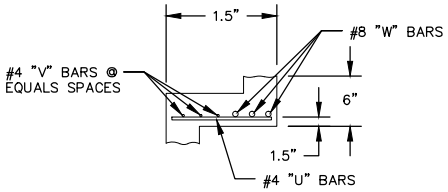

SECTION R–R

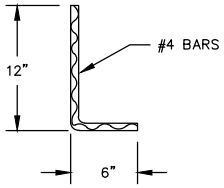

DOWEL

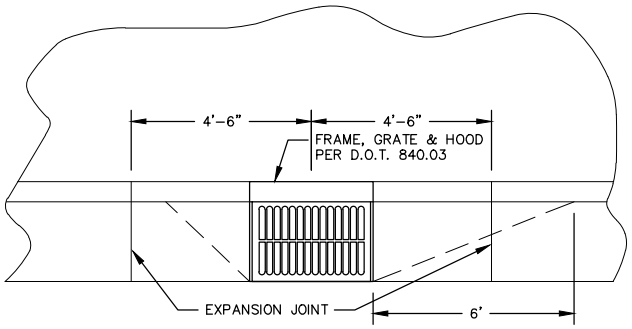

PLAN

CURB & GUTTER WITH CATCH BASIN ON STEEP GRADES

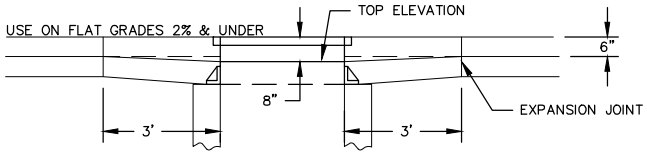

ELEVATION

NORMAL CURB & GUTTER ON LIGHT GRADES

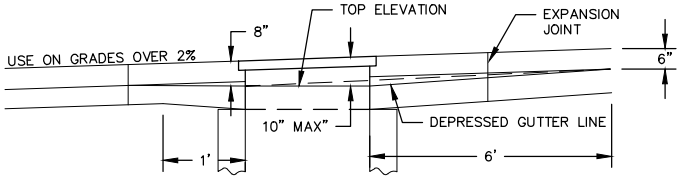

ELEVATION

NORMAL CURB & GUTTER ON STEEP GRADES

MINIMUM DIMENSIONS AND QUANTITIES FOR CONCRETE CATCH BASIN (BASED ON MIN. HEIGHT, H, WITH NO RISER) *

DIMENSIONS OF BOX AND PIPE						COVER DIMENSION		BARS–U		BARS–V		BARS–W		CU. YDS. CONC. IN BOX				DEDUCTIONS ONE PIPE	
PIPE	SPAN	WIDTH	WIDTH	SPAN	MIN. HEIGHT									TOTAL LBS.	TOP SLAB	BOTTOM SLAB	TOT. CONC. FOR MINIMUM HEIGHT, H		
D	A	B	C	G	H	E	F	NO.	LENGTH	NO.	LENGTH	NO.	LENGTH					C.M.	R.C.
12"	3'–0"	2'–2"	--	--	2'–9"	--	--	--	--	--	--	--	--	--	--	0.235	0.772	0.015	0.026
15"	3'–0"	2'–2"			3'–0"	--	--	--	--	--	--	--	--	--	--	0.235	0.829	0.023	0.036
18"	3'–0"	2'–2"			3'–3"	--	--	--	--	--	--	--	--	--	--	0.235	0.887	0.033	0.049
24"	3'–0"	2'–2"			3'–9"	--	--	--	--	--	--	--	--	--	--	0.235	1.001	0.059	0.085
30"	3'–0"	2'–2"	3'–4"		4'–3"	1'–2"	4'–0"	4	1'–5"	2	3'–9"	3	3'–9"	39	0.123	0.321	1.433	0.092	0.127
36"	3'–0"	2'–2"	3'–10"		4'–9"	1'–8"	4'–0"	4	1'–11"	3	3'–9"	3	3'–9"	43	0.161	0.358	1.714	0.132	0.178
42"	3'–0"	2'–2"		4'–5"	5'–3"	1'–5"	3'–2"	4	1'–8"	2	2'–11"	3	2'–11"	32	0.122	0.318	1.738	0.180	0.243
48"	3'–0"	2'–2"		5'–0"	5'–9"	2'–0"	3'–2"	4	2'–3"	3	2'–11"	3	2'–11"	35	0.145	0.352	2.052	0.235	0.317
54"	3'–0"	2'–2"		5'–7"	6'–3"	2'–7"	3'–2"	4	2'–10"	5	2'–11"	3	2'–11"	41	0.180	0.386	2.387	0.297	0.401

* RISER HAS .228 CUBIC YARDS OF CONCRETE PER FOOT HEIGHT

City of Asheville, NC

Standard Specifications and Details Manual

PRECAST CONCRETE CATCH BASIN

REVISIONS	
DATE	DESCRIPTION

STD. NO.

8.03A

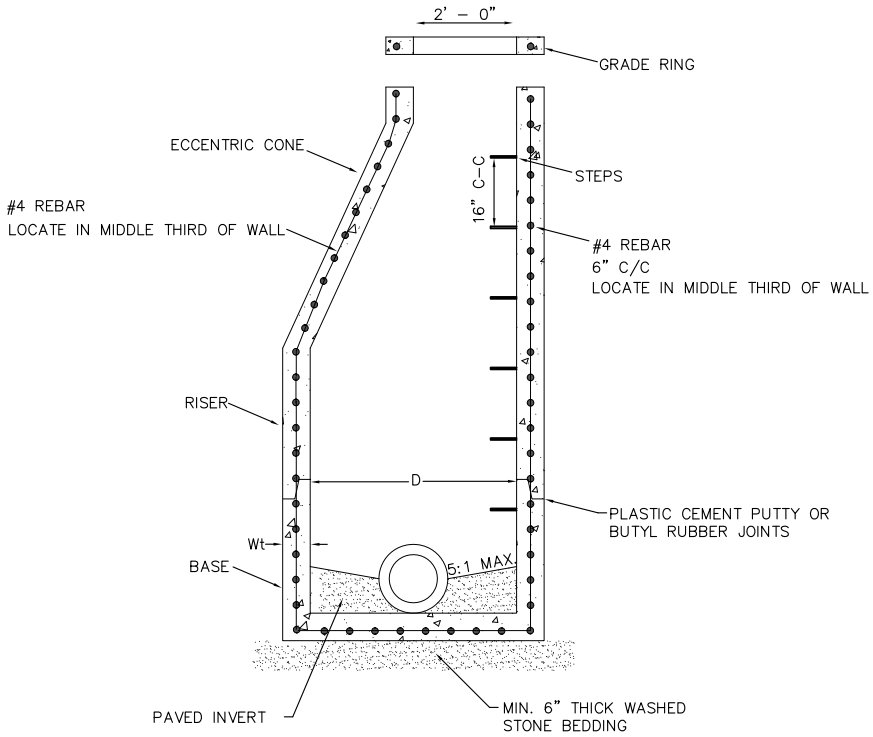

TYPICAL MANHOLE SECTION

INTERNAL DIAMETER (FT.)	MIN. WALL THICKNESS (Wt) (IN.)	MIN.BOTTOM SLAB THICKNESS (Bt) (IN.)	MIN. CIRCUMFERENTIAL AREA OF STEEL PER VERTICAL FT. (SQ. iN.)
4	4	6	0.12
5	5	8	0.15
6	6	8	0.18

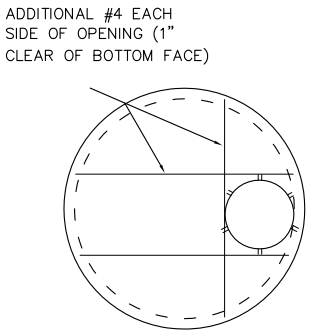

MANHOLE DETAIL

GENERAL NOTES

USE 4,000 psi MINIMUM COMPRESSIVE STRENGTH CONCRETE.

ALL STRUCTURES 4' OR DEEPER SHALL HAVE ACCESS STEPS. STEPS SHALL BE INSTALLED 16" ON CENTER.

BOLT ANCHOR LID RING.

City of Asheville, NC

Standard Specifications and Details Manual

PRECAST CONCRETE MANHOLE JUNCTION BOX

REVISIONS	
DATE	DESCRIPTION
6/9/15	REV. 12" O.C. TO 16" IN DETAIL

STD. NO.

8.04

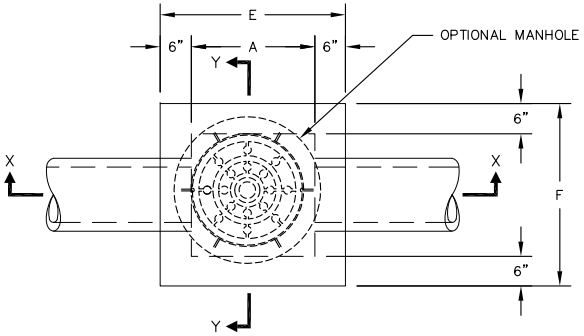

PLAN

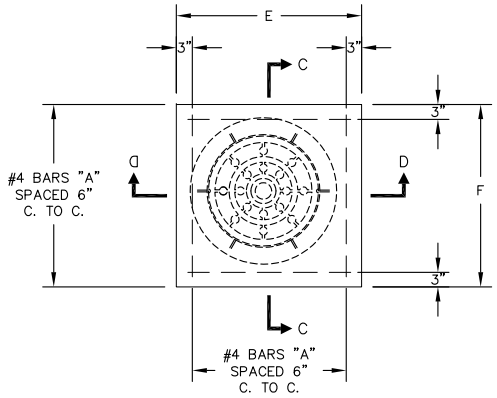

GENERAL NOTES:

CHAMPHER ALL EXPOSED CORNERS 1"

USE CLASS "B" CONCRETE THROUGHOUT.

OPTIONAL CONSTRUCTION – MONOLITHIC POUR, 2" KEYWAY, OR #4 BAR DOWELS AT 12" CENTER AS DIRECTED BY THE ENGINEER.

USE FORMS FOR THE CONSTRUCTION OF THE BOTTOM SLAB.

IF REINFORCED CONCRETE PIPE IS SET IN BOTTOM SLAB OF BOX, ADD TO SLAB AS SHOWN ON D.O.T. STD. NO. 840.00.

PROVIDE ALL CATCH BASINS OVER 4" IN DEPTH WITH STEPS 16" ON CENTER. USE STEPS WHICH COMPLY WITH D.O.T. STD. DRAWING 840.66

ADJUST THE STEEL, CONCRETE AND BRICK MASONRY QUANTITIES TO INCLUDE THE ADDITION OF THE MANHOLE (I.E. DIAGONAL BARS SHORTENED AROUND OPENING IN TOP SLAB. ADDITIONAL VARIABLE HEIGHT BRICK MASONRY, OPENING IN TOP SLAB.)

MAX. DEPTH OF THIS STRUCTURE FROM TOP OF BOTTOM SLAB TO TOP ELEVATION IS 12 FEET

SEAL RISER ALL BOX AND RISER JOINTS WITH PLASTIC CEMENT PUTTY OR BUTYL RUBBER JOINTS.

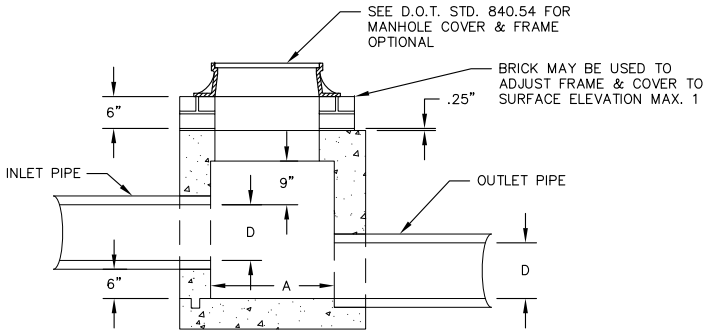

SECTION X–X

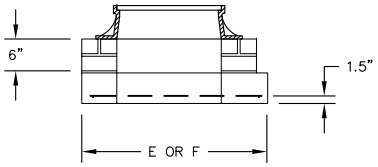

SECTION
C–C OR D–D

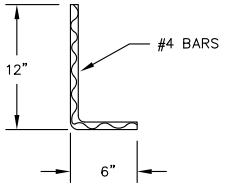

DOWEL

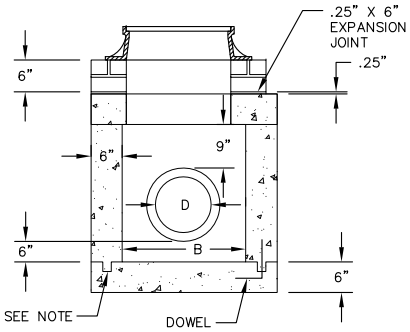

SECTION Y–Y

DIMENSIONS AND QUANTITIES FOR CONCRETE JUNCTION BOXES														
DIMENSIONS OF BOX AND PIPE				REFORCEMENT BARS "A"		TOP SLAB DIMENSION		CU. YDS. IN BOX			TOTAL QUANITIES BOX AND SLABS		DEDUCTIONS ONE PIPE	
PIPE	SPAN	WIDTH	HEIGHT											
D	A	B	H	NO.	LENGTH	E	F	TOP SLAB	BOTTOM SLAB	WALL/ FT. OF HT.	LBS. REINF.	CU. YDS. MIN. H	C.M.	R.C.
12"	2'–0"	2'–0"	2'–3"	12	2'–9"	3'–0"	3'–0"	0.167	0.167	0.185	22	0.750	0.015	0.024
15"	2'–3"	2'–3"	2'–6"	12	3'–0"	3'–3"	3'–3"	0.196	0.196	0.204	24	0.902	0.023	0.036
18"	2'–6"	2'–6"	2'–9"	14	3'–3"	3'–6"	3'–6"	0.227	0.227	0.222	30	1.065	0.033	0.049
24"	3'–0"	3'–0"	3'–3"	16	3'–9"	4'–0"	4'–0"	0.296	0.296	0.259	40	1.434	0.059	0.085
30"	3'–6"	3'–6"	3'–9"	18	4'–3"	4'–6"	4'–6"	0.375	0.375	0.296	51	1.860	0.092	0.127
36"	4'–0"	4'–0"	4'–3"	20	4'–9"	5'–0"	5'–0"	0.463	0.463	0.333	64	2.341	0.132	0.178
42"	4'–6"	4'–6"	4'–9"	22	5'–3"	5'–6"	5'–6"	0.560	0.560	0.370	77	2.878	0.180	0.243
48"	5'–4"	5'–4"	5'–3"	26	6'–3"	6'–4"	6'–4"	0.743	0.743	0.407	111	3.623	0.235	0.317
54"	5'–10"	5'–10"	5'–9"	28	6'–7"	6'–10"	6'–10"	0.865	0.865	0.444	126	4.283	0.297	0.401
60"	6'–6"	6'–6"	6'–3"	30	7'–3"	7'–6"	7'–6"	1.042	1.042	0.481	145	5.090	0.367	0.495
66"	7'–1"	7'–1"	6'–9"	32	7'–10"	8'–1"	8'–1"	1.210	1.210	0.518	169	5.917	0.444	0.589

City of Asheville, NC

Standard Specifications and Details Manual

PRECAST CONCRETE JUNCTION BOX

REVISIONS	
DATE	DESCRIPTION
6/9/15	ADDED DIMENSION
6/9/15	REV. 12" O.C. TO 16" IN NOTES

STD. NO.

8.04A

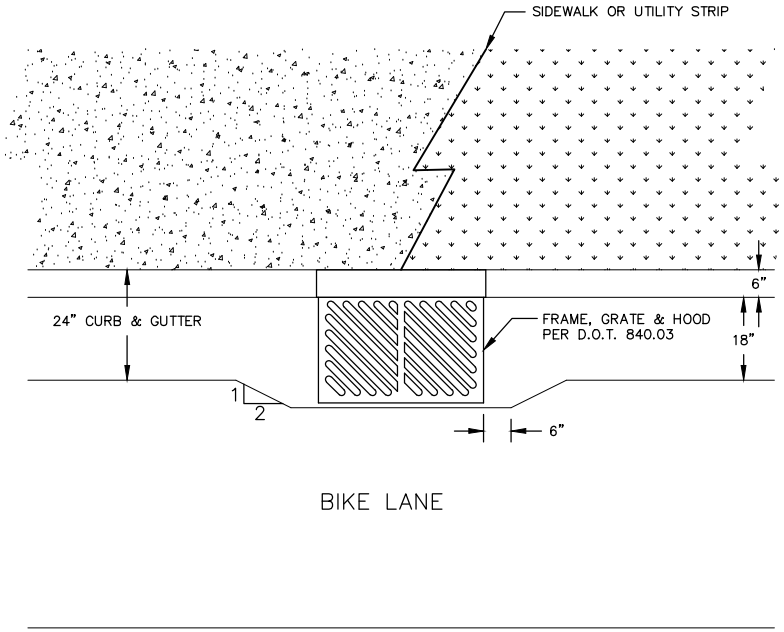

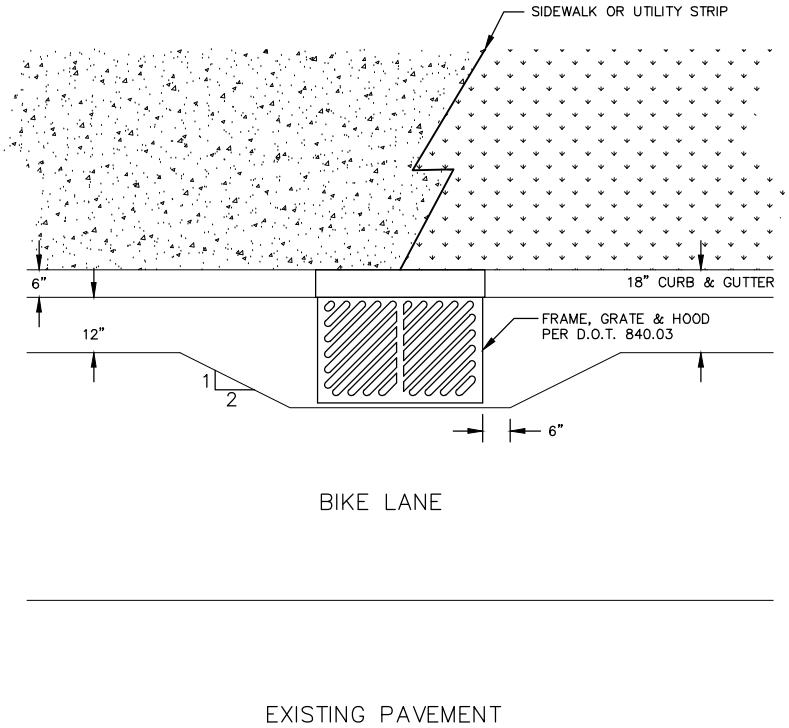

GENERAL NOTES

1. FRAME, GRATE AND HOOD ASSEMBLY WILL BE DOMESTIC STEEL PRODUCT
2. WHEN WARRANTED GRATES WILL BE TYPE E OR BICYCLE SAFE TYPE F AND TYPE G PER NC DOT STD. DETAIL 840.03 PAGE 2 OF 2.
3. CURB AND GUTTER WILL BE CONSTRUCTED WITH 4000 PSI CONCRETE
4. ANY SUBSTITUTION OF GRATE TYPES OR VARIANCE OF CONSTRUCTION PRACTICES MUST BE APPROVED BY THE STORMWATER SERVICES MANAGER OR APPOINTED DESIGNEE.

City of Asheville, NC Standard Specifications and Details Manual	CURB INLETS FOR 18" & 24" CURB & GUTTER	REVISIONS DATE / DESCRIPTION	STD. NO. 8.05

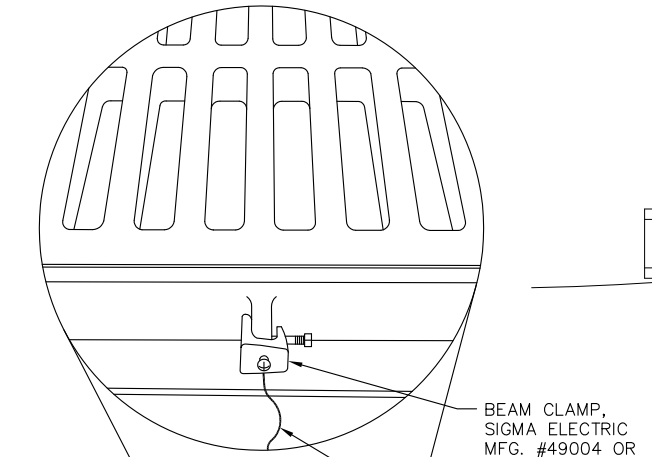

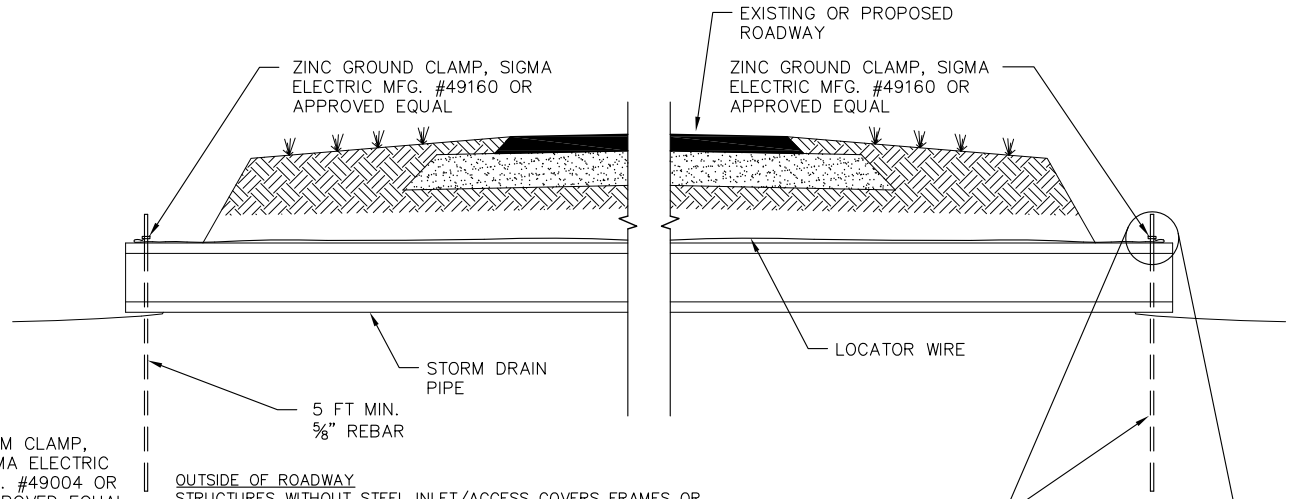

OUTSIDE OF ROADWAY
STRUCTURES WITHOUT STEEL INLET/ACCESS COVERS FRAMES OR STEEL INLET/ACCESS COVERS FRAMES WITHOUT VERTICAL FLANGES, INSTALL A 5 FT MIN. 5/8" REBAR, ZINC GROUND CLAMPS, AND LOCATOR WIRE ADJACENT TO THOSE STRUCTURES.

INSIDE OF ROADWAY
STRUCTURES WITH STEEL INLET/ACCESS COVERS FRAMES WITHOUT VERTICAL FLANGES, RAISE FRAME WITH BLOCKS ALLOWING SPACE TO ATTACH BEAM CLAMP AND LOCATOR WIRE TO HORIZONTAL BASE FLANGE. ALL INLETS OR ACCESS COVERS SHALL NOT BE INSTALLED ABOVE GRADE WITHIN ROADWAY.

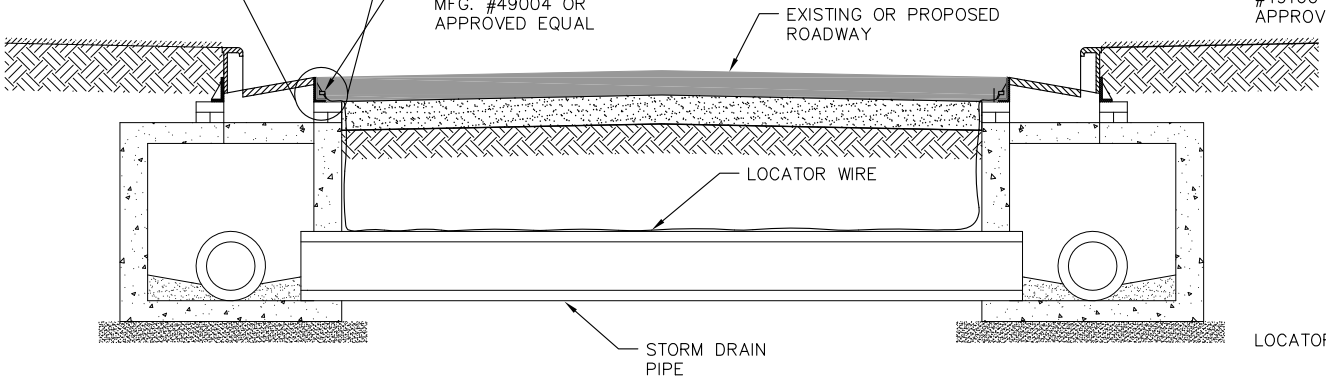

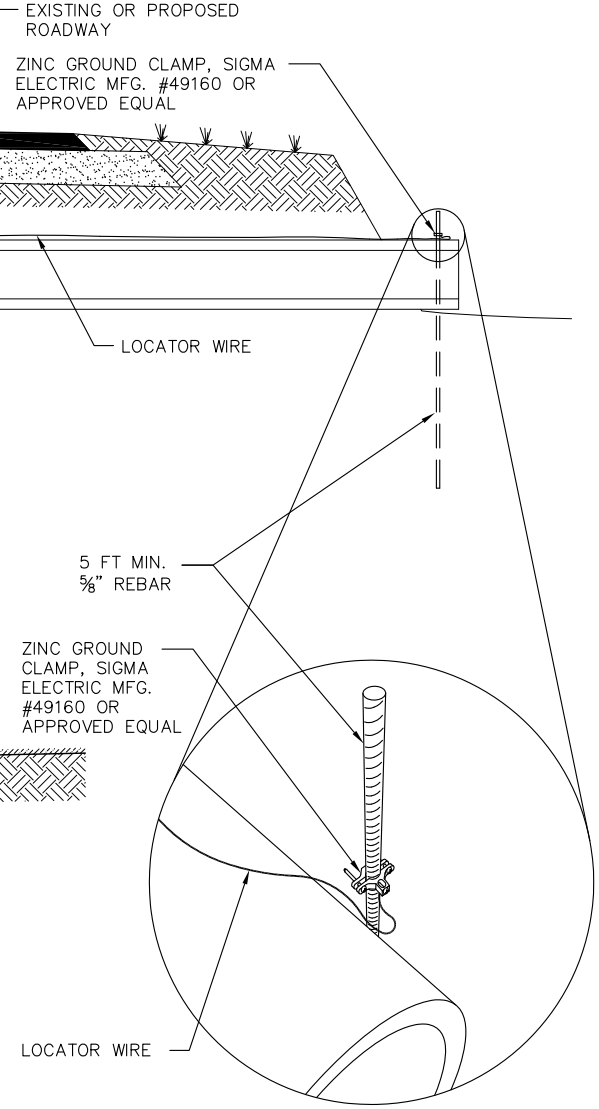

City of Asheville, NC Standard Specifications and Details Manual	STORM DRAIN PIPE LOCATION DEVICES	REVISIONS DATE / DESCRIPTION	STD. NO. 8.06