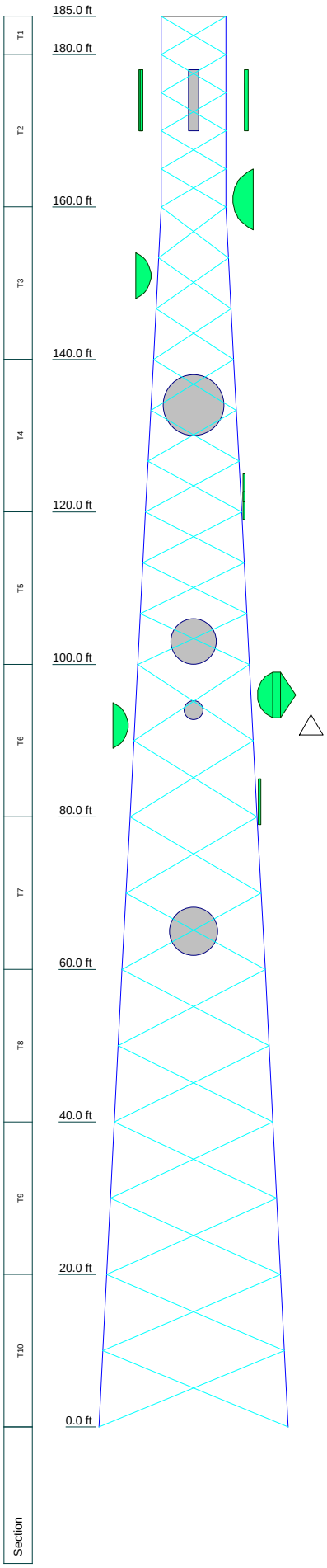

DESIGNED APPURTENANCE LOADING

TYPE	ELEVATION
EMS RS651210DAL2 w/ MP (US Cellular)	174
Amphenol BXA 80040/8CF (US Cellular)	174
KMW AM-X-CD-17-65-00T-RET w/ MP (US Cellular)	174
KMW AM-X-CD-17-65-00T-RET w/ MP (US Cellular)	174
KMW AM-X-CD-17-65-00T-RET w/ MP (US Cellular)	174
KMW ET-X-CW-45-19-iR-AT (US Cellular)	174
Sector Mount [SM 602-1] (US Cellular)	174
Sector Mount [SM 602-1] (US Cellular)	174
Sector Mount [SM 602-1] (US Cellular)	174
Pipe Mount (US Cellular)	161
PAR8-59 (US Cellular)	161
Pipe Mount (US Cellular)	151

TYPE	ELEVATION
PAR6-59 (US Cellular)	151
Pipe Mount (US Cellular)	134
PAR8-59 (US Cellular)	134
Fiber Box [16" x 6" x 6"]	122
IPEX 6' x 6SCH40 Omni (City of Asheville)	122
Pipe Mount (US Cellular)	103
PAR6-59 (US Cellular)	103
Pipe Mount (US Cellular)	96
PAR6-59 (US Cellular)	96
Pipe Mount (City of Asheville)	94
Andrew VHLP2.5-11 (City of Asheville)	94
Pipe Mount (US Cellular)	92
PL6-59D (US Cellular)	92
IPEX 6' x 6SCH40 Omni (City of Asheville)	82
Pipe Mount (City of Asheville)	65
PAR6-65A (City of Asheville)	65

Vertical Solutions
113 Edinbugh South Drive Suie 130
Cary, NC 27511
Phone: (919) 321-6167
FAX: (919) 321-1768

Job: ***Upper White Fawn, NC***		
Project: ***1401110***		
Client: City of Asheville	Drawn by: catchley	App'd:
Code: TIA-222-G	Date: 08/12/14	Scale: NTS
Path: L:\2014\1110_Upper White Fawn_NC\Task 1\Models\UpperWhiteFawn-Equipment Audit.en		Dwg No. E-1

Date: 8/26/2014
Job #:141110
By: CAA

City of Asheville Equipment

RAD Center	Mount Type	Equipment Description	Coax	Existing Equipment[1]		Maximum Equipment	
				EPA (ft^2)	Weight (lbs)	EPA (ft^2)[2]	Weight (lbs)[3]
122	Flush (B-leg)	RFS BMR6 Omni w/ Base	(1) 7/8, (1) 3/8	2.63	58.00	2.76	60.90
		Amplifier		0.80	32.00	0.85	33.60
94	Pipe (A-leg)	Andrew VHLP2.5-105-111	(1) EW 90	10.18	132.00	10.69	138.60
82	Flush (B-leg)	RFS BMR6 Omni w/ Base	(1) 1 5/8	2.63	58.00	2.76	60.90
65	Pipe (A-leg)	Andrew PAR6-65-P7A w/ Shroud	(1) EW 63	27.31	244.00	28.67	256.20
			Total Equip:	43.55	376.00	45.73	394.80

1 - Existing values are a conservative estimate of weight and area of all existing equipment, including mount and mount pipes.

2 - Increased EPA values represent the maximumum allowable area that can be installed without requiring a rigorous strutural analysis. Values are based on an allowable 5% increase in capacity per *TIA-222-G-2* .

3 - Increased weight values represent the maximumum allowable weight of equipment that can be installed without requiring a rigrourous strutural analysis. Values are based on an allowable 5% increase in capacity per 2012 NCBC.

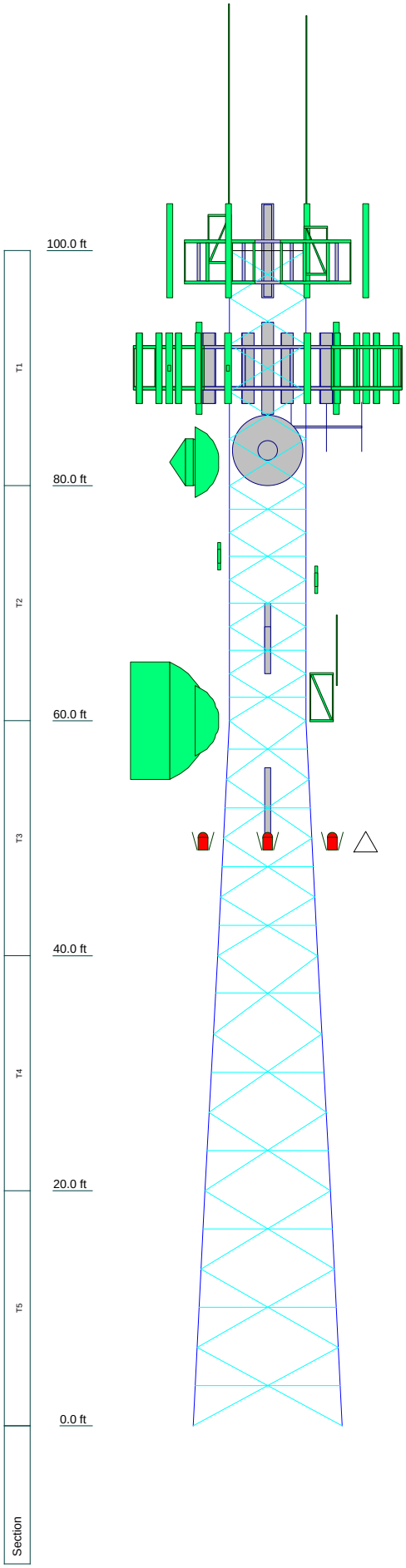

DESIGNED APPURTENANCE LOADING

TYPE	ELEVATION
20" Omni (Unknown)	121 - 101
20" Omni (Unknown)	120 - 100
Side Arm Mount [SO 304-1] (Unknown)	101
Side Arm Mount [SO 304-1] (Unknown)	100
Beacon	100
KMW AM-X-CW-18-65-00T-RET w MP (US Cellular)	100
BXA-80090/8CF w/Mount Pipe (US Cellular)	100
(2) KMW AM-X-CW-18-65-00T-RET w MP (US Cellular)	100
(2) KMW AM-X-CW-18-65-00T-RET w MP (US Cellular)	100
Sector Mount [SM 409-1] (US Cellular)	99
Sector Mount [SM 409-1] (US Cellular)	99
Sector Mount [SM 409-1] (US Cellular)	99
(2) CSS SA14-86-0D with Mount Pipe (Verizon)	90
(2) CSS SA14-86-0D with Mount Pipe (Verizon)	90
(2) CSS SA14-86-0D with Mount Pipe (Verizon)	90
CSS XP18-80 with Mount Pipe (Verizon)	90
CSS XP18-80 with Mount Pipe (Verizon)	90
CSS XP18-80 with Mount Pipe (Verizon)	90
Antel BXA-70063/8CF E-DIN 2 w/ Mount Pipe (Verizon)	90
Antel BXA-70063/8CF E-DIN 2 w/ Mount Pipe (Verizon)	90

TYPE	ELEVATION
Antel BXA-70063/8CF E-DIN 2 w/ Mount Pipe (Verizon)	90
(2) RFS FD9R6004CL ShareLite Diplexer (Verizon)	90
(2) RFS FD9R6004CL ShareLite Diplexer (Verizon)	90
(2) RFS FD9R6004CL ShareLite Diplexer (Verizon)	90
Sector Mount [SM 602-1] (Verizon)	90
Sector Mount [SM 602-1] (Verizon)	90
Sector Mount [SM 602-1] (Verizon)	90
Decibel Yagi (COA)	85
4SCH40x60 Dish Mount (COA)	83
Nano Bridge M5 (COA)	83
Andrew PL4-107-PXA Dish (US Cellular)	82
4SCH40x60 Dish Mount (US Cellular)	82
airMAX AM-5G17 w/ MP (COA)	74
Rocket M5 (COA)	74
airMAX AM-5G16 w/ MP (COA)	72
Rocket M5 (COA)	72
IPEX 6' x 6SCH40 Omni (COA)	67
Fiber Box [24"x 6 1/2" x 6"] (COA)	67
Stand-off Arm (COA)	62
6' Omni (COA)	62
Andrew UHX10-59-P3A (US Cellular)	60
4SCH40x60 Dish Mount (US Cellular)	60
IPEX 6' x 6SCH40 Omni (COA)	53
Side Light	49
Side Light	49
Side Light	49

Vertical Solutions
113 Edinbugh South Drive Suie 130
Cary, NC 27511
Phone: (919) 321-6167
FAX: (919) 321-1768

Job: ***Royal Pines, NC***		
Project: ***VSi Job #: 141112***		
Client: City of Asheville	Drawn by: catchley	App'd:
Code: TIA-222-G	Date: 08/13/14	Scale: NTS
Path: L:\2014\1112_Royal Pines_NC\Task 1\Models\Royal Pines-Equipment Audit.en		Dwg No. E-1

Date: 8/26/2014
Job #:141112
By: CAA

City of Asheville Equipment

RAD Center (ft)	Mount Type	Equipment Description	Coax	Existing Equipment[1]		Maximum Equipment	
				EPA (ft^2)	Weight (lbs)	EPA (ft^2)[2]	Weight (lbs)[3]
110	(2) 16" Side Arms	(2) 20' Omnis	(2) 1/2	16.22	150.00	17.03	157.50
85	Flush (A-leg)	3' Yagi	(1) 7/8	3.27	6.5	3.43	6.83
83	Pipe (A-leg)	Nano Bridge M5	(1) CAT 5	4.38	16.64	4.60	17.47
74	Flush (C-leg)	AirMax AM-5G17 w/ Rocket M5	(1) CAT 5	2.04	15.00	2.14	15.75
72	Fluch (B-leg)	AirMax AM-5G16 w/ Rocket M5	(1) CAT 5	2.04	15.00	2.14	15.75
67	Flush (A-leg)	RFS BMR6 Omni w/Base	(1) 7/8	2.63	58.00	2.76	60.90
		Amplifier	(1) 3/8	1.36	32.00	1.43	33.60
62	(1) 4' Side Arm	Motoraola PDF-6471A	(1) 7/8	3.44	71.00	3.61	74.55
53	Flush (A-leg)	RFS BMR6 Omni w/Base	(1) 1 5/8	2.63	58.00	2.76	60.90
			Total Equip:	38.01	422.14	39.91	443.25

1 - Existing values are a conservative estimate of weight and area of all existing equipment, including mount and mount pipes

2 - Increased EPA values represent the maximumum allowable area that can be installed without requiring a rigorous strutural analysis. Values are based on an allowable 5% increase in capacity per *TIA-222-G-2*.

3 - Increased weight values represent the maximumum allowable weight of equipment that can be installed without requiring a rigrourous strutural analysis. Values are based on an allowable 5% increase in capacity per 2012 NCBC

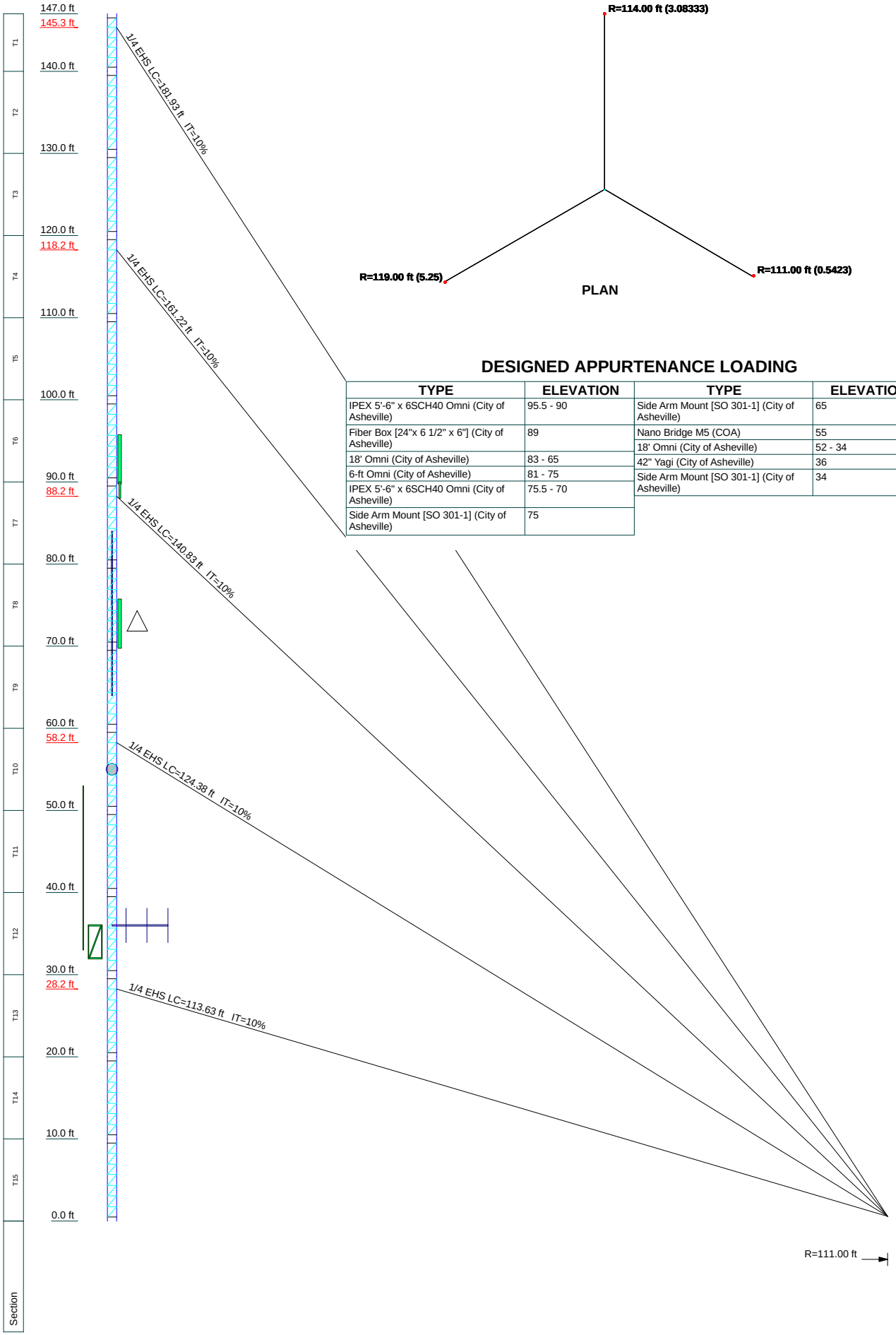

DESIGNED APPURTENANCE LOADING

TYPE	ELEVATION	TYPE	ELEVATION
IPEX 5'-6" x 6SCH40 Omni (City of Asheville)	95.5 - 90	Side Arm Mount [SO 301-1] (City of Asheville)	65
Fiber Box [24"x 6 1/2" x 6"] (City of Asheville)	89	Nano Bridge M5 (COA)	55
18' Omni (City of Asheville)	83 - 65	18' Omni (City of Asheville)	52 - 34
6-ft Omni (City of Asheville)	81 - 75	42" Yagi (City of Asheville)	36
IPEX 5'-6" x 6SCH40 Omni (City of Asheville)	75.5 - 70	Side Arm Mount [SO 301-1] (City of Asheville)	34
Side Arm Mount [SO 301-1] (City of Asheville)	75		

Vertical Solutions
113 Edinbugh South Drive Suie 130
Cary, NC 27511
Phone: (919) 321-6167
FAX: (919) 321-1768

Job: ***Peach Knob, NC***			
Project: ***141111***			
Client: City of Asheville	Drawn by: catchley	App'd:	
Code: TIA-222-G	Date: 08/21/14	Scale: NTS	
Path: L:\2014\1111_Peach Knob_NC\Task 1\Models\Peach Knob-Equipment Audit.er		Dwg No. E-1	

Date: 8/26/2014
Job #:141111
By: CAA

City of Asheville Equipment

RAD Center	Mount Type	Equipment Description	Coax	Existing Equipment[1]		Maximum Equipment	
				EPA (ft^2)	Weight (lbs)	EPA (ft^2)[2]	Weight (lbs)[3]
95	Flush (B-leg)	RFS BMR6 Omni w/ Base	(1) 7/8	2.63	58.00	2.76	60.90
89		Amplifier	(1) 3/8	1.36	32.00	1.43	33.60
78	(1) 2'-4" Standoff	6' Omni	(1) 7/8	4.17	71.00	4.38	74.55
75	Flush (B-leg)	RFS BMR6 Omni w/ Base	(1) 1 5/8	2.63	58.00	2.76	60.90
75	(1) 4' Standoff	20' Omni	(1) 3/8	9.27	90.00	9.73	94.50
55	Flush (A-leg)	NanoBridge M5	(1) 1/4	4.09	11.00	4.30	11.55
44	(1) 4' Standoff	20' Omni	(1) 1/2	9.27	90.00	9.73	94.50
36	Flush (A-leg)	42" Yagi	(1) 1/2	3.75	6.5	3.94	6.83

800 MHz Trunked Components

8TAC92 Components

Fire VHF Components

Total Equip:	37.17	416.50	39.03	437.33

1 -Existing values are a conservative estimate of weight and area of all existing equipment, including mount and mount pipes.

2 - Increased EPA values represent the maximumum allowable area that can be installed without requiring a rigorous strutural analysis. Values are based on an allowable 5% increase in capacity per *TIA-222-G-2*.

3 - Increased weight values represent the maximumum allowable weight of equipment that can be installed without requiring a rigrourous strutural analysis. Values are based on an allowable 5% increase in capacity per 2012 NCBC.

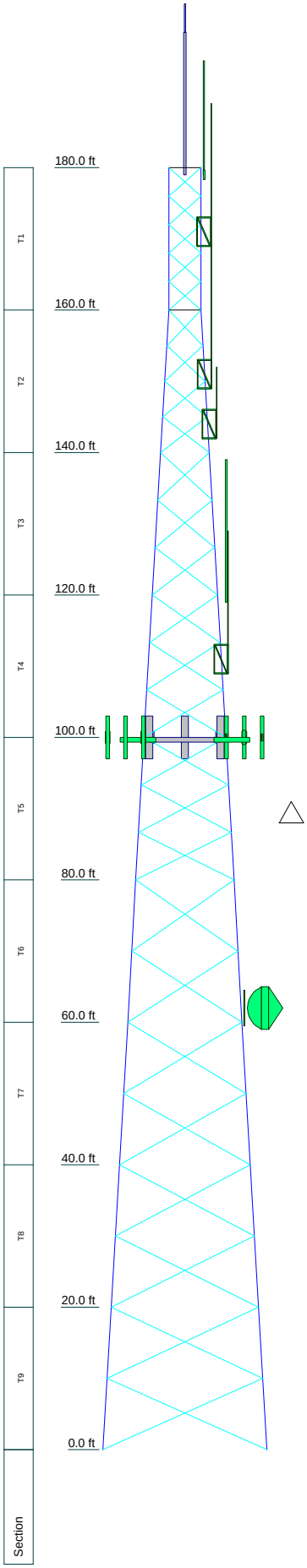

DESIGNED APPURTENANCE LOADING

TYPE	ELEVATION	TYPE	ELEVATION
4-ft Lightning Rod (Tower)	203 - 199	Kathrein 742 235V01 w/MP (ATI)	100
20' Lightning Rod Extension (Tower)	199 - 179	Kathrein 742 235V01 w/MP (ATI)	100
16' Omni (City of Asheville)	195 - 179	Kathrein 742 235V01 w/MP (ATI)	100
Fiber Box [16" x 6" x 6"] (City of Asheville)	179	(2) Ericsson RRUS 11 (ATI)	100
		Ericsson RRUS 11 (ATI)	100
Sector Mount [SM 303-1] (City of Asheville)	179	(2) Ericsson RRUS 11 (ATI)	100
20" Omni (City of Asheville)	179 - 159	(2) TMA (ATI)	100
Sector Mount [SM 303-1] (City of Asheville)	159	(2) TMA (ATI)	100
		(2) TMA (ATI)	100
10' Dipole (City of Asheville)	157 - 147	(2) Kathrein 860 10025 (ATI)	100
Sector Mount [SM 303-1] (City of Asheville)	147	(2) Kathrein 860 10025 (ATI)	100
		(2) Kathrein 860 10025 (ATI)	100
20'x6.5" omni (City of Asheville)	139 - 119	Raycap DC6-48-60-18-8F (ATI)	100
Sector Mount [SM 1301-1] (City of Asheville)	119	Raycap DC6-48-60-18-8F (ATI)	100
		Sector Mount [SM 308-1] (ATI)	100
Andrew SBNH-1D6565B with Mount Pipe (ATI)	100	Sector Mount [SM 308-1] (ATI)	100
		Sector Mount [SM 308-1] (ATI)	100
Andrew SBNH-1D6565B with Mount Pipe (ATI)	100	4SCH40x60 (City of Asheville)	62
Andrew SBNH-1D6565B with Mount Pipe (ATI)	100	Andrew PAR6-65 Dish (City of Asheville)	62

Vertical Solutions
113 Edinbugh South Drive Suie 130
Cary, NC 27511
Phone: (919) 321-6167
FAX: (919) 321-1768

Job: ***Spivey Mtn, NC***		
Project: ***1401114***		
Client: City of Asheville	Drawn by: catchley	App'd:
Code: TIA-222-G	Date: 08/15/14	Scale: NTS
Path: L:\2014\1114_Spivey Mtn_NC\Task 1\Models\Spivey Mtn-Equipment Audit.er		Dwg No. E-1

Date: 8/26/2014
Job #:141114
By: CAA

City of Asheville Equipment

RAD Center (ft)	Mount Type	Equipment Description	Coax	Existing Equipment		Maximum Equipment	
				EPA (ft^2)	Weight (lbs)	EPA (ft^2)[1]	Weight (lbs)[2]
179	(1) 9' Side Arm	16' Omni	(1) 7/8	9.35	114.50	9.82	120.23
		Amplifer		0.80	32.00	0.85	33.60
159	(1) 7' Side Arm	20' Omni	(1) 7/8	9.54	96.80	10.02	101.64
147	(1) 10.5' Side Arm	10' Dipole	(1) 7/8	8.30	107.75	8.72	113.14
119	(1) 15' Truss Frame[4]	20' Omni	(1) 1 5/8	10.00	50.00	10.50	52.50
62	Pipe Mount	Andrew PAR6-65-P7A	(1) EW 63	27.31	244.00	28.67	256.20
62	Flush Mount	RFS BMR6 Omni w/ Base (Reserved)	(1) 7/8	2.63	58.00	2.76	60.90
			Total Equip:	67.93	703.05	71.33	738.20

1 - Existing values are a conservative estimate of weight and area of all existing equipment, including mount and mount pipes.

2 - Increased EPA values represent the maximumum allowable area that can be installed without requiring a rigorous strutural analysis. Values are based on an allowable 5% increase in capacity per *TIA-222-G-2*.

3 - Increased weight values represent the maximumum allowable weight of equipment that can be installed without requiring a rigrourous strutural analysis. Values are based on an allowable 5% increase in capacity per 2012 NCBC.

4 - Omni is mounted to 3-sided truss section. Sufficent data was not recorded to provide an accurate estimate of Mount EPA and weight.